XCITE SYSTEMS CORPORATION

XCITE
Owner's Manual

1100-7-FTS Linear Exciter System

- 1114-4-T/C Exciter Head
- 1104-MOD4 Master Controller
- 1001P Field Test Power Supply
- 2522 Load Cell

Xcite Systems Corporation • 675 Cincinnati Batavia Pike • Cincinnati, Ohio 45245
Tel: (239) 980-9093 • Fax: (239) 985-0074 • Email: info@xcitesystems.com • Web: www.xcitesystems.com

Copyright 1997
Xcite Systems Corporation

This document contains proprietary information of Xcite Systems Corporation and is tendered subject to the conditions that the information (a) be retained in confidence (b) not be reproduced or copied in whole or in part and (c) not be used or incorporated into any product except under an express written agreement with Xcite Systems Corporation.

Table of Contents

1. Warranty P-7
1.1. Xcite Products P-7
1.2. Third Party Hardware Products P-7
1.3. IMPORTANT LIMITATIONS P-7
1.4. NOTICE OF LIMITED WARRANTY P-8
2. Receiving P-8
2.1. Receiving Inspection Procedure P-8
2.2. Shipping Container P-8

1100-4, 1100-6 and 1100-7 Linear Exciter System Setup and Operation

1. Introduction ..... S&O-1
2. System Description ..... S&O-1
3. Setup Procedure ..... S&O-2
3.1. Mounting the 1106-4-T/C, 1107-4-T/C or 1114-4-T/C Exciter Head ..... S&O-2
3.2. 1001P Field Test Power Supply Commissioning Procedure ..... S&O-3
3.3. Hydraulic Hookup ..... S&O-3
3.4. Cable Hookup ..... S&O-4
4. Operation Procedure ..... S&O-4
4.1. Switch Settings ..... S&O-4
5. Shutdown Procedures ..... S&O-5
6. Troubleshooting ..... S&O-5
7. Storage Instructions ..... S&O-6

1100, 1200 and 1300 Exciter Heads

1. Introduction EH-1
2. Theory of Operation EH-2
2.1. Introduction EH-2
2.2. Circuit Description (Electric) EH-2
2.3. Circuit Description (Hydraulic) EH-3
3. Major Components EH-3
3.1. Actuator EH-3
3.2. Servovalve EH-4
3.3. Load Cell EH-4
3.4. Displacement Transducer Kit EH-4
4. Operation EH-5
4.1. Operating Precautions EH-5

5. Care and Maintenance EH-6
5.1. Each Usage EH-6
5.2. Each Month EH-6
5.3. Periodic EH-6
6. Specifications EH-6

1001P Field Test Power Supply

1. Introduction FTPS-1
2. Theory of Operation FTPS-1
2.1. Hydraulic System FTPS-1
2.2. Electrical System FTPS-4
3. Description FTPS-5
3.1. Pressure Gauge FTPS-6
3.2. Power Indicator Lamp FTPS-6
3.3. Emergency Stop Switch and Remote Emergency Stop Connector FTPS-6
3.4. Hydraulic Supply and Return Connectors FTPS-6
3.5. HPC Control Connector FTPS-6
3.6. Oil Level/ Temperature Gauge FTPS-6
3.7. Voltage Selector Switch FTPS-6
3.8. Fuses FTPS-7
3.9. Oil Level/ Temperature Switch FTPS-7
3.10. Filter Switch FTPS-7
4. Preliminary to Operation FTPS-7
5. Care and Maintenance FTPS-8
5.1. General FTPS-8
5.2. Field Test Reservoir Draining/ Refilling Procedure FTPS-9
5.3. Change Oil Filter FTPS-9
6. Troubleshooting FTPS-9
7. Specifications FTPS-10
8. Drawings FTPS-10

Master Controller

1. Introduction MC-1
2. Theory of Operation MC-1
2.1. Configurations MC-1
2.1.1. Single Loop MC-1
2.1.2. Dual Loop MC-1

3. Description MC-2
3.1. Front Panel MC-3
3.1.1. Static Signal Level Meter (M-101) MC-3
3.1.2. Static Set Point (R301) MC-3
3.1.3. Dynamic Signal Level Meter (M-102) MC-3
3.1.4. Dynamic Set Point (R303) MC-3
3.1.5. Excitation Mode (SW304) MC-3
3.1.6. Interlock (L301) MC-4
3.1.7. Dither - ON/ OFF (SW308) MC-4
3.1.8. Static Set Point (R301) MC-4
3.1.9. Static Gain MC-4
3.1.10. Load Cell MC-5
3.1.11. Calibrate/ Operate (SW307) MC-5
3.1.12. Power (SW301) MC-5
3.1.13. Pump MC-6
3.1.14. Dynamic Set Point (R303) MC-6
3.1.15. Frequency Range - HIGH/ LOW (SW309) MC-6
3.2. Rear Panel MC-6
3.2.1. Exciter Head (J305) MC-6
3.2.2. Displacement (J311) MC-6
3.2.3. Calibration Resistor (J304) MC-6
3.2.4. Static Preload (SW310) MC-6
3.2.5. Interlock (J306) MC-7
3.2.6. Power (J307) MC-7
3.2.7. Fuse (F301) MC-7
3.2.8. Program Input (J308) MC-7
3.2.9. Controlled Variable - Static MC-8
3.2.10. Controlled Variable - Dynamic MC-8
3.2.11. Compression Output (J310) MC-9
3.2.12. Standby Level (R313) MC-9
3.2.13. Load Cell Output (J303) MC-9
3.2.14. Power Amp - INT/ EXT (SW312) MC-9
3.2.15. Power Amp - Input (J312) MC-9
3.2.16. EXT Set Point - Static (J313) MC-10
3.2.17. EXT Set Point - Dynamic (J314) MC-11
4. Operation MC-11
4.1. Concept of Operation MC-11
4.2. System Interconnection MC-12
4.3. Operation - Force Control MC-12
4.3.1. Set Controls MC-12
4.3.2. Depress the Power Switch MC-13
4.3.3. Adjust Load Cell MC-13
4.3.4. Depress Pump Start Button MC-13

4.4. Operation - Displacement Control MC-14
4.4.1. Set Controls MC-14
4.5. Operation - External Variable MC-15
4.6. Computer Control - External Set Points (Static and Dynamic) MC-15
5. Theory of Operation MC-16
5.1. Circuit Descriptions MC-16
5.1.1. VR101 (Voltage Regulator) MC-16
5.1.2. SW310 (Preload Switch) MC-16
5.1.3. A109 (Amplifier) MC-16
5.1.4. A104 and A105 (Static Control Loop) MC-17
5.1.5. A401 and A402 (Dynamic Loop) MC-17
5.1.6. A107 (Inverter Buffer) MC-18
5.1.7. A106 and U103 (Peak Detector Circuit) MC-18
6. Specifications MC-19
7. Drawings MC-19
8. Parts List MC-21
9. Calibration MC-26
9.1. Equipment Needed MC-26
9.2. Master Controller MC-27
9.2.1. Meter Zero Adjustments MC-27
9.2.2. +/-15 Volt Supply Check MC-27
9.2.3. +/- 60 Volt Supply Verification MC-28
9.2.4. Load Cell Excitation Voltage Verification MC-28
9.2.5. Master Controller Board 110-04 Calibration Procedure MC-28
9.2.6. Master Controller Board 110-02 Calibration Procedure MC-31
9.2.7. Master Controller Board 110-01 Calibration Procedure MC-31
9.3. Exciter Head Calibration Procedure MC-38
9.3.1. Load Cell Amplifier Calibration MC-38
9.3.2. Static Loop Gain Calibration MC-40
9.3.3. Static Set Point Level Calibration MC-42
9.3.4. High Frequency Dynamic Level Calibration MC-42
9.3.5. Low Frequency Dynamic Calibration MC-43
9.4. Displacement Calibration Procedure MC-44
9.4.1. LVDT Symmetry Verification and Adjustment MC-44
9.4.2. Displacement Zero Calibration MC-45
9.4.3. Displacement Scaling Calibration MC-45
9.4.4. Final External Static Control Variable Calibration MC-45
9.4.5. Dynamic Displacement Calibration MC-45
9.4.6. External Static and Dynamic Set Point Calibration MC-46

1. Warranty

1.1. Xcite Products

Xcite Systems Corporation warrants that any Xcite manufactured product will conform to Xcite's written specifications applicable at the time of shipment and will be free from defects in material or workmanship for one year. During the Xcite warranty period, Xcite, or its agent, will repair or replace, at its option, any defective product when returned to the factory, freight prepaid by the buyer, and will return the product freight collect. Xcite assumes no liability for loss or damage during shipment to and from the factory. If insurance on the return shipment is required, it must be specified by the buyer.

1.2. Third Party Hardware Products

Xcite will transfer the original manufacturer's warranty for third party hardware (not manufactured by Xcite) to the buyer. The warranty policy of those companies in effect at the time of shipment will apply to their products, and Xcite assumes no additional responsibility. Xcite will indicate on its invoice the warranty terms relevant to specific Third Party Hardware items.

1.3. IMPORTANT LIMITATIONS

1.3.1. The warranty period commences upon the day of shipment from Xcite without respect to any acceptance criteria or payment provisions in any particular contract.

1.3.2. The warranty period does not apply to normal wear items or to damage caused by abuse, neglect or accident.

1.3.3. Xcite's responsibility is limited to the above obligations, and Xcite cannot be held responsible for special or consequential or other damages.

ALL OTHER EXPRESS OR IMPLIED WARRANTIES, INCLUDING MERCHANTABILITY AND FITNESS FOR PURPOSE, ARE EXCLUDED.

1.4. NOTICE OF LIMITED WARRANTY

THE FOLLOWING ITEM(S) INCLUDED IN THIS XCITE PRODUCT OR SYSTEM ARE EXCLUDED FROM OUR ONE YEAR WARRANTY BECAUSE THEY ARE NORMAL WEAR ITEMS:

1) All system seals
2) Servovalve*

*The servovalve used on this system will be damaged if any particle(s) larger than 10 microns are permitted to enter the valve. Extreme care should be exercised when the hydraulic hoses are connected to ensure no foreign particles enter the connections. It is recommended to always wipe the hydraulic couplings with lint free towel before making connections. Always use the protective dust covers on the hoses (the dust covers can be connected together when operating the system). Any damage to the servovalve as a result of contamination is specifically excluded from warranty.

2. Receiving

2.1. Receiving Inspection Procedure

Xcite Systems Corporation products are shipped in a manner designed to protect against all normal shipping hazards. Immediately upon receipt, inspect all equipment and note any visible damage. In accordance with the instructions in this manual, test its functional operation. Keep all documents in relation to this shipment. If shipping damage is apparent, file a claim with the carrier's claim agent and send a copy to Xcite Customer Service. Be sure to include the product name, model number and serial number on all correspondence.

2.2. Shipping Container

Shipping containers are supplied with all Xcite products. Store these containers and inserts in a dry area for possible later use.

XCITE SYSTEMS CORPORATION

1100-4, 1100-6 & 1100-7
Linear Exciter System
Setup and Operation

1100-4, 1100-6 & 1100-7 Linear Exciter System

1. Introduction

The function of this system is to impart a controlled force into structures such as machine tools, automobiles and truck suspensions. The force generation is accomplished by a closed loop electrohydraulic system which can apply a static preload in addition to dynamic force up to 1200 Hz under either sine or random conditions.

The static control loop of the system utilizes either the built-in Displacement Transducer (LVDT) or strain gage load cell as feedback and controls the static position of the mass while the dynamic control loop utilizes the built-in load cell as feedback to measure and control the dynamic force applied to the structure under test.

2. System Description

1100-4 System	● 1106-4-T/C Exciter Head ● 1104-Mod4 Master Controller ● 1001P Field Test Power Supply **or** 1201B or 1301B Laboratory Power Supply
1100-6 System	● 1107-4-T/C Exciter Head ● 1104-Mod4 Master Controller ● 1001P Field Test Power Supply **or** 1201B or 1301B Laboratory Power Supply
1100-7 System	● 1114-4-T/C Exciter Head ● 1104-Mod4 Master Controller ● 1001P Field Test Power Supply **or** 1201B or 1301B Laboratory Power Supply

This manual contains a section of detailed information on each of these components, and the user should familiarize himself or herself with this information before using the system.

If the user has purchased the Exciter Head and Master Controller without an Xcite Hydraulic Power Supply, any reference to the power supply in this manual applies to whatever source of hydraulic power the user has elected.

3. Setup Procedure

3.1. Mounting the 1106-4-T/C , 1107-4-T/C or 1114-4-T/C Exciter Head

3.1.1. The Exciter head may be mounted in any orientation but care must be taken to provide strain relief on hoses and cables if the unit is mounted at heights which would add significant loads to the hoses and cables.

3.1.2. The Exciter mounting base has clearance holes for mounting. Secure the unit so that it will not "walk" when exciting resonant frequencies of the structure.

3.1.3. **CAUTION!** Care must be taken that the Exciter is firmly and squarely attached to the back up fixturing. Any clearances or dead zones in the attachment or dynamics of any fixtures will cause distortion of the force waveform.

3.1.4. **Mounting the 1114 Exciter Head**

The 1114-4-T/C Exciter Head is a double ended head and as such has different operating characteristics than the 1106 & 1107 single ended heads.

When mounting the Exciter Head, if it is used in a compression mode only (ie - it is pushing on the structure), the Exciter Head will only produce up to 500 lbs Static Force and up to 400-500 lbs Dynamic Force. (Depending on the structure stiffness of the test article.)

In order to obtain a full Dynamic Force from the 1114 Exciter Head, it is necessary to connect the Load Cell to the structure under test so the system can operate in a Tension/Compression mode. (ie - it is both pushing and pulling on the structure). Under these conditions, the Static Force is set to zero lbs and the Dynamic Force to a maximum of 1000 lbs. The force produced will then be 800-1000 lbs "pushing" and 800-1000 lbs "pulling". (Depending on the structure stiffness of the test article.)

It is very important when connecting the Exciter Head load cell rigidly to the test article that there is good alignment between the test article and the Exciter Head. If there is a misalignment, there will be large side loads which can cause damage to the load cell or the Exciter Head piston and bearings.

3.2. 1001P Field Hydraulic Power Supply Commissioning Procedure

3.2.1. Refer to **page FTPS-1, section 2.1** for oil filling instructions on HPS.

3.2.2. Refer to **page FTPS-7, section 4** for start up procedure of the HPS.

3.2.3. Push the red *POWER* button on the Master Controller. It should light up along with the *PUMP STOP* light.

3.2.4. Push the *PUMP START* button on the Master Controller and the Power Supply should start up.

3.2.5. Allow approximately 15 to 30 seconds for the pump to prime and come up to 3000 psi. Check the pressure on the gage located on the side of the Hydraulic Power Supply.

3.2.6. Verify that the fan motor located in the Hydraulic Power Supply is operating.

3.2.7. The 1001P Field Hydraulic Power Supply is now running correctly.

3.2.8. Push the *PUMP STOP* button. The power supply will shut down and the *PUMP STOP* switch will stay lit.

3.2.9. Push the *POWER* switch of the Master Controller to turn it off.

3.3. Hydraulic Hookup

3.3.1. Connect the Hydraulic Power Supply pressure and return hoses to the Exciter Head pressure and *Return* hoses via the polarized quick disconnects supplied with the system hoses.

3.3.2. Take care to maintain cleanliness by always attaching caps to the quick disconnects when disconnected.

3.3.3. When in doubt about hose polarity, the convention on the Hydraulic Power Supply is:

Supply Pressure - Coupler
Supply Return - Nipple

3.3.4. Take care that hoses will not rub against sharp objects when pulsating.

3.4. Cable Hookup

3.4.1. Connect cable C-11226 to the Master Controller rear panel connector and to the servovalve and load cell of the Exciter Head.

3.4.2. Connect cable B-11689 to the rear panel connector of the Master Controller and the displacement connector of the Exciter Head.

4. Operation Procedure

4.1. Switch Settings

4.1.1. Set the switches on the back of the Master Controller to the following:

CONTROLLED VARIABLE	
STATIC	EXTERNAL (Static Displacement Control) INTERNAL (Static Force Control)
DYNAMIC	INTERNAL
STATIC PRELOAD	COMPRESSION
POWER AMP	INT

4.1.2. Set the switches on the front of the Master Controller to the following:

DITHER	OFF
STATIC SET POINT	0.0
STATIC GAIN	VARIABLE (For Displacement Control) FIXED (For Force Control)
VARIABLE GAIN	5.0
LOAD CELL	OPERATE
EXCITATION MODE	STANDBY/ RESET
FREQUENCY	HIGH
DYNAMIC SETPOINT	0.0

4.1.3. Connect a 1.0 Vrms variable frequency oscillator to the Program Input J308. (1 Hz to 2000 Hz)

4.1.4. Press *POWER* on Master Controller. The *POWER* light will be illuminated.

4.1.5. Press *PUMP START* on the Master Controller.

4.1.6. Turn the *EXCITATION MODE* to *STATIC*. The *STATIC SIGNAL LEVEL* should remain at 0% since the *STATIC SETPOINT* is set to 0.0. Turn the *STATIC SETPOINT* to the position desired of the piston (or static force level if in *FORCE CONTROL MODE*).

4.1.7. Turn *EXCITATION MODE* to *STATIC + DYNAMIC.*

4.1.8. Slowly increase the *DYNAMIC SETPOINT* until the desired force is monitored at the *DYNAMIC SIGNAL LEVEL* meter and is measured at the *LOAD CELL OUTPUT BNC*. The output voltage is calibrated at 250 lb/ volt.

5. Shutdown Procedures

5.1. Turn *EXCITATION MODE* to *STANDBY/ RESET.*

5.2. Push *PUMP STOP* of the Master Controller.

6. Troubleshooting Guide

Problem	Action
Static meter does not indicate piston is retracted when system is turned on in Standby/ Reset mode. OR Static meter does not show changes in displacement or force when the set point is changed.	Check that the hydraulic power supply is turned on and reading 3000 psi. **See 3.2.** Check that all hoses and cables are connected. **See 3.3. and 3.4.** Verify that all Master Controller switches are in the correct position. **See 4.1.1. and 4.1.2.**
No force is measured at the Force Output BNC or is indicated on the Dynamic meter when the system is in the Static + Dynamic Mode.	Verify that the 1 V rms signal from the signal source is connected to the Program Input BNC on the back of the Master Controller. **See 4.1.3.** Verify that the Dynamic Set Point potentiometer is turned up. **See 4.1.8.**

7. Storage Instructions

Be sure to attach the caps and plugs to all hydraulic quick disconnects to protect from contamination when not in use.

Keep the system in a clean and low humidity environment when not in use.

XCITE SYSTEMS CORPORATION

1100, 1200 & 1300 Exciter Heads

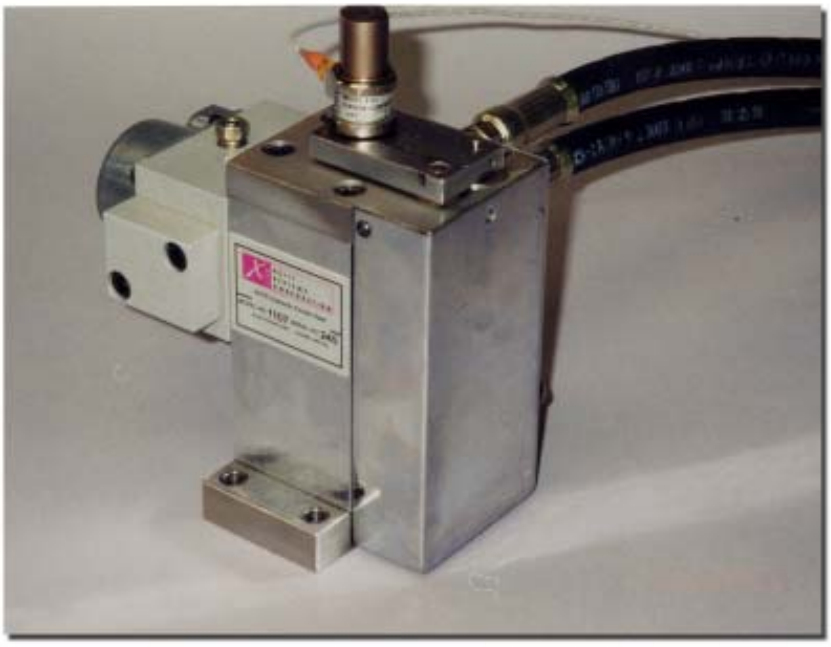

1. Introduction

The linear single-ended or double ended exciter head is a high-force, wide frequency response, linear actuator designed to be used in a closed loop control system. It is ideally suited for mechanical impedance and component testing. Using the latest design concepts in force transducers and servovalves has resulted in a compact Exciter Head that is suited to simulate the level and direction of input forces encountered in complex machinery. A load cell provides a force feedback signal for monitoring and closed loop force control of the actuator. A tandem mounted displacement kit provides a feedback signal for closed loop displacement control of the exciter.

The Displacement Kit is designed to provide a displacement feedback signal for an exciter head. When used with the MOD4 version of the Xcite Master Controller, the Displacement Kit provides a means of monitoring or controlling low-frequency displacements. Also, the kit may be used to maintain a static or mean position while controlling another dynamic variable, such as force, velocity, or acceleration. The Kit is constructed such that it becomes an integral part of the exciter head. It is mounted along-side of the actuator to maintain the small total package size.

The Exciter Head, supplied with all necessary electrical and hydraulic connectors, is designed so that wrong connections cannot be made. Also included on all standard exciter heads is a miniaturized strain-gauge force transducer that permits continuous monitoring of static and dynamic forces.

Use the following table to determine the force capacity for your model.

Model (Single Ended)	**1106**	**1107**	**1206**	**1207**	**1306**	**1352**
Static Force (lbs)	1000	1000	2000	2000	20,000	5000
Dynamic Force (lbs)	1000	1000	2000	2000	20,000	5000

Model (Double Ended)	**1114**	**1215**	**1310**
Compression Mode Only			
Static (lbs)	500	1000	5000
Dynamic (lbs)	500	1000	5000
Tension/Compression Mode			
Static (lbs)	0	0	0
Dynamic (lbs)	1000	2000	10,000

WARNING

Precautions regarding the test specimen should be considered.

Although exciter heads are rated for static plus a peak dynamic force, exciter heads are capable of compressive forces in excess of 200% of their rating, and tensile forces in excess of 100% of that rating if instability in the control loop occurs.

2. Theory of Operation

2.1. Introduction

The major function of the exciter head is to apply a controlled static force preload and a controlled random or sinusoidally varying dynamic force (variable frequency), to a test structure. The cylinder rod is the actual output device. The force transducer and servovalve control this output. The load cell provides an output signal proportional to static loads, but unlike a piezo-electric transducer, operates from DC to 1500 Hz. Thus, the cell is well suited to provide a constant monitor of the exciter's preload for use in the control circuitry. The load cell provides a signal proportional to time-varying forces (dynamic) and therefore provides complete signal information on the output force.

The servovalve is supplied a constant source of pressure (3000 psi) which is applied to either side of the exciter's cylinder in a differential manner. The driving signal to the servovalve is provided by the system controller.

2.2. Circuit Description (Electric)

2.2.1. Head

The load cell and servovalve are separately connected to their respective cable connectors. Shielded cable is used throughout to provide optimum reduction of externally induced noise voltage.

2.2.2. Displacement Kit

All connections to the Displacement Kit are through a single connector mounted in the Displacement Kit cover. Pins A and B of this connector are +15 VDC and ground respectively. These bring power from the Controller to the LVDT. On selected models, a filtering capacitor (68 mfd) across these pins is used to reduce noise generated by the LVDT from getting back to the controller circuitry. Pins C and D are the displacement feedback signal leads to the Controller.

2.3. Circuit Description (Hydraulic)

2.3.1. Head

Oil is supplied to the exciter head at 3000 psi by the hydraulic power supply. The servovalve controls the flow of oil into the cylinder ports, creating a differential pressure according to the force demands of the control system. Oil from the servovalve is routed back to the hydraulic supply.

2.3.2. Displacement Kit

The Displacement Kit consists of an Exciter Head top plate, an LVDT-type displacement transducer, and a cover with electrical connector. The top plate contains a means for clamping the LVDT and a self lubricating bronze impregnated bushing which prevents side loading of the LVDT core. The displacement transducer is an integrated package consisting of a solid-state oscillator, and a phase-sensitive demodulator. The coils of the transformer are connected in series opposition so that output resulting from a displacement is a DC voltage proportional to the core position with respect to the electrical center. The polarity of the voltage is a function of the direction of the core displacement with respect to the electrical center.

3. Major Components

3.1. Actuator

The hydraulic actuator consists of a cylinder, a single ended piston, a specially designed bearing to minimize oil leakage and increase seal life, and a manifold for routing the oil from the external supply hoses to the servovalve and hydraulic cylinder. The built-in oil routing from external hoses to the servovalve is designed for safety and to meet the response and force requirements of the system. Cylinder specifications for Xcite heads discussed in this manual are in the following table.

Model	**1106**	**1114**	**1107**	**1206**	**1207**	**1215**	**1306**	**1310**	**1352**
Rod	.75	.75	.75	1.0	1.0	1.0	3.5	2.0	1.75
Bore	1”	1”	1”	1.5”	1.5”	1.5”	5”	3”	2.5”
Stoke	1”	1”	2”	1”	2”	2”	1”	2”	3”

3.2. Servovalve

The servovalve is a dual-stage flow-control device using electromagnetic drive in the first stage to control the hydraulically amplified second stage. This second stage provides the differential pressure flow to control the piston. Hydraulic fluid entering the valve must be filtered to 3 micron absolute to prevent damage to the servovalve. The unit is NOT customer-serviceable.

3.3. Load Cell

The load cell is a force transducer which incorporates a 350 ohm 4-leg strain gage. By applying a voltage across the strain-gage bridge, a differential voltage proportional to force is developed at the bridge output. The load cell excitation voltage is provided by a precision voltage reference in the Master Controller.

The Load Cell may be used for testing in tension, compression, or a combination of both. The cell is sized so that the maximum load of the exciter head cannot damage the unit.

Calibration is performed by simulating bridge unbalance with a known value of resistance. The excitation voltage of the bridge is then adjusted to obtain the force value stated on the load cell resistor calibration plug. The Calibration Plug, showing the calibration value unique to the load cell used in your unit, is included with the system. The “Cal Plug” is inserted in its appropriate receptical located on the rear of the Master Controller.

3.4. Displacement Transducer Kit

The Displacement Kit consist of a Linear Variable Displacement Transducer (LVDT) and the hardware necessary to mount it to the exciter head.

The LVDT is a sealed assembly which contains all necessary solid-state electronics required to develop a voltage proportional to the stroke of the piston. The unit consists of a stationary coil assembly which is clamped to the cylinder and a core (rod) which is attached to the piston. An oil impregnated bronze bushing prevents the piston from turning and causing misalignment in the core/ coil assemblies.

The core position is adjusted so that the LVDT output is equal and of opposite polarity at the extreme limits of piston position. A voltage null represents mid-stroke of the piston. The output is nominally +/- 12 VDC for an input of 15 VDC which is supplied by the Master Controller via the displacement cable. Internal amplifiers in the Master Controller convert the +/- 12 VDC signal from the LVDT to 0 to +10 VDC for monitoring of the displacement signal. Calibration is such that +10 volt output always equals the overall stroke of the exciter head. (Ex - a 2” stroke exciter head will have an output sensitivity of 2 in/ 10V or .2 in/ Volt.)

4. Operation

All operations of the Exciter Head are controlled by the appropriate Xcite Controller. Please refer to the Master Controller section in this manual for proper use of the system.

WARNING

Before performing any test, check the mounting of the load cell to the actuator. The load cell must be firmly mounted to the actuator or fatigue failure of the actuator mounting stud may occur.

4.1. Operating Precautions

4.1.1. Unless the Load Cell is attached to the test specimen, the peak dynamic force should not exceed the static force. This can cause the Load Cell to pull away from the test piece every half cycle, and impact or hammer the test piece on the other half cycle. Damage inflicted on the load cell in this manner is not covered under any Xcite warranty.

4.1.2. If the feedback signal is broken or the controller malfunctions, the exciter can output full force. Since the servovalve functions as a differential device, the full 3000 psi applied to the bottom side of the piston will produce in excess 100% of the rated forces.

4.1.3. Proper selection of feedback signal can improve exciter performance and provide data with greater dynamic range.

EXAMPLE:
A vibration test is to be performed on a test specimen requiring static preload that must be held as accurately as possible to 5000 pounds. The test specimen has a static stiffness (k) of 20,000 pounds per inch. Should the static loop of the controller use force feedback or displacement feedback? Consider the following:

The usable range of most control loops is approximately 40 dB (ratio of 100:1). An exciter with a one inch stroke and 58,000 pound total force capability used to perform this test would result in displacement control down to .01 inch or force control down to 580 pounds.

Therefore, if force is used to control the static loop, accuracy should be easily held to 5,000 pounds, +/-580 pounds.

However, if displacement is used to control the static loop, accuracy could be held to .01 inch. With a static stiffness of 2×10^4 lbs/ in, this would result in force control accuracy of 5,000 pounds, +/-200 pounds (.01 inch x 2×10^4 lbs/ in = 200 pounds).

In conclusion, it is very important that you understand how to operate the system and make proper decisions on test methods to be used.

5. Care and Maintenance

Maintenance is minimal. Precautions for cleanliness are the major considerations.

5.1. Each Usage

End/ Dust covers should always be kept on the Exciter Head hoses when they are not connected because contaminates larger than 3 micron can damage the servovalve.

The top plate should always be kept clean to prevent piston scouring. Additionally, dirt on the top plate will affect the LVDT.

5.2. Each Month

Place a few drops of any lubrication oil on the linear guide bearing for the Displacement Transducer.

5.3. Periodic

Periodically replace the piston rod seals. These can be expected to last a minimum of 100 hours of operation and longer if side load is kept at a minimum. When leakage from the top of the exciter head becomes excessive, the seals should be replaced by returning the Exciter Head to the factory.

6. Specifications

Output Response — The force output is a function of frequency, test specimen stiffness, and hydraulic power supply. (See enclosed Response curve)

Model (Single Ended)	**1106**	**1107**	**1206**	**1207**	**1352**	**1306**
Dimensions						
Height	6.12”	7.12”	9.75”	11.00”	18.56”	20.12”
Width	6”	6”	8.00”	8.00”	14”	13”
Depth	3.75”	3.75”	4.18”	4.18”	5.62”	9.75”
Stroke (Peak to Peak)	1”	2”	1”	2”	3”	1”

Model (Double Ended)	**1114**	**1215**	**1310**
Dimensions			
Height	8.78”	14.625”	23.56”
Width	6”	6”	11.0”
Depth	3.75”	7.75”	11.0”
Stroke (Peak to Peak)	1”	2”	2”

Displacement Kit Model Number	**MT-302**	**MT-303**	**MT-305**
Displacement Transducer			
LVDT rated linear range	+/-.5”	+/-1”	+/-1.5”
LVDT maximum usable range	+/-.75”	+/-1.5”	+/-2.0”
Input (fixed by controller)	+15 VDC	+15 VDC	+15 VDC
Output	0-10 VDC	0-10 VDC	0-10 VDC
Frequency Response (3 dB point)	110 Hz	100 Hz	75 Hz
Linearity	+/-.5% of full scale output at rated linear range (deviation from best straight line passing through 0)		

Xcite 1100 Field Test Series

The Xcite 1100 Field Test Series uses the same Exciter Heads and Master Controller as the 1100 Laboratory Series but replaces the 5 GPM 3-Phase Hydraulic Power Supply with a field portable 1.2 GPM Single Phase Power Supply. While providing the same 3000 PSI pressure, the field test unit is switch selectable from 110 V (20 A) to 220 V (10 A) single phase power.

This simplified power requirement along with the packaging of the unit in a roto-molded shipping case provide for ease of modal testing in remote areas of your facility and allows air shipment to off site test destinations. The 1100 Field Test Series is used in the power and natural gas distribution industries as well as on shipboard structure borne noise path identification.

	Xcite 1100-4-FT System	Xcite 1100-6-FT System	Xcite 1100-7-FT System
Hydraulic Power Supply	1001P 1.2 GPM (5 l/m)	1001P 1.2 GPM (5 l/m)	1001P 1.2 GPM (5 l/m)
Master Controller	1104-Mod4	1104-Mod4	1104-Mod4
Exciter Head	1106-4-T/C	1107-4-T/C	1114-4-T/C
Static Force	1,000 lb (4,450 N)	1,000 lb (4,450 N)	Total Static & Dynamic
Dynamic Force	1,000 lb (4,450 N)	1,000 lb (4,450 N)	Force =1,000 lb (4,450 N)
Stroke	1.0 in (25 mm)	2.0 in (50 mm)	1.0 in (25 m)
Rod	.75 in (18 mm)	.75 in (18 mm)	.75 in (18 mm)
Bore	1.0 in (25 mm)	1.0 in (25 mm)	1.0 in (25 mm)
Thread	.38 - 24	.38-24	.38-24
Load Cell	2,500 lb (11,125 N)	2,500 lb (11,125 N)	2,500 lb (11,125 N)
LVDT	1.0 in (25 mm)	2.0 in (50 mm)	1.0 in (25 mm)
Exciter Design	Single Ended	Single Ended	Double Ended

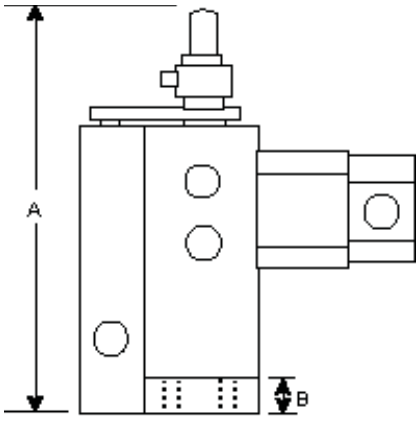

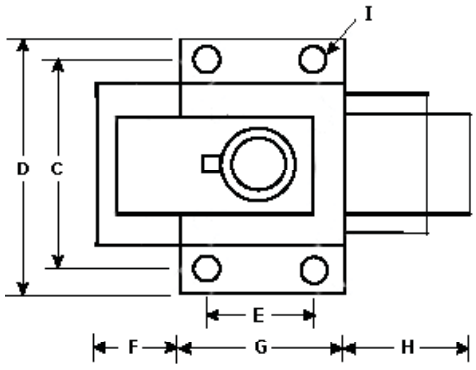

Exciter Head	A		B		C		D		E		F		G		H		I	
	in	mm	in	mm	in	mm	in	mm	in	mm	in	mm	in	mm	in(dia)	mm(dia)	in(dia)	mm(dia)
1106-4-T/C	6.12	153	0.60	15	3.12	78	3.75	94	1.38	35	1.12	28	2.00	50	2.75	69	0.28	7
1107-4-T/C	7.12	178	0.60	15	3.12	78	3.75	94	1.38	35	1.12	28	2.00	50	2.75	69	0.28	7
1114-4-T/C	8.78	220	0.60	15	3.12	78	3.75	94	1.38	35	1.12	28	2.00	50	2.75	69	0.28	7

Xcite 1100-4 Field Test System
1100-6-T/C Exciter Head

Peak Dynamic Force vs. Frequency

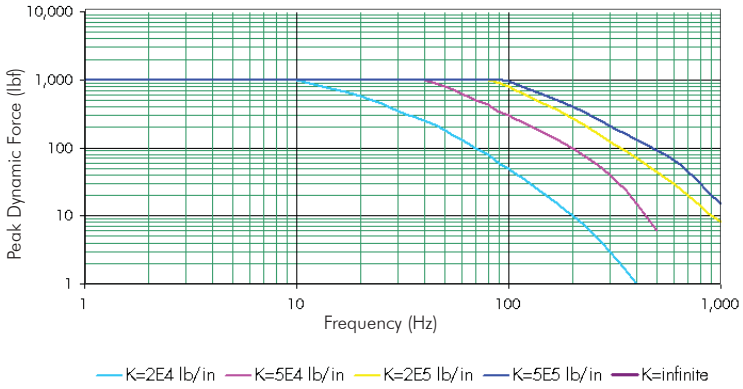

Peak Displacement vs. Frequency

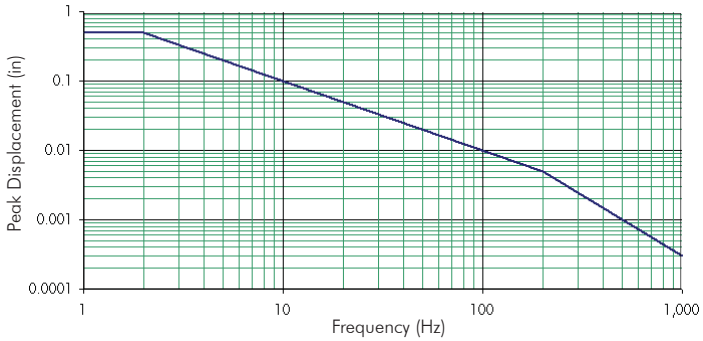

Xcite 1100-6 Field Test System
1100-7-T/C Exciter Head

Peak Dynamic Force vs. Frequency

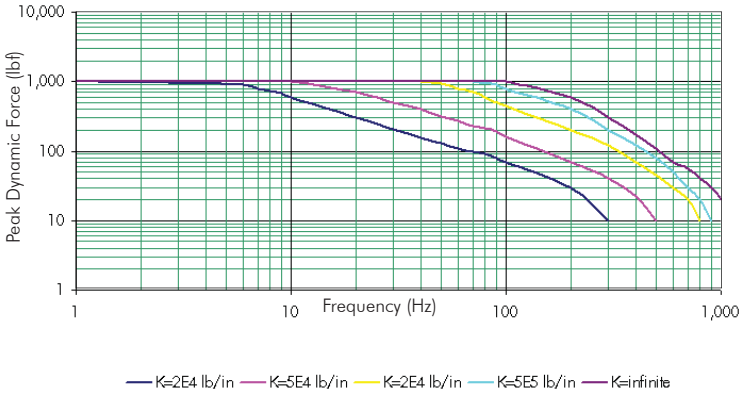

Peak Displacement vs. Frequency

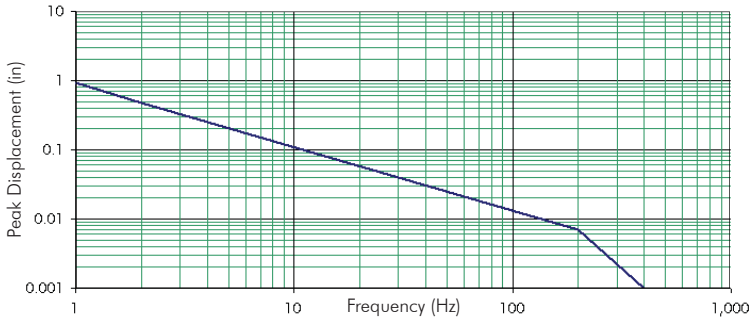

Xcite 1100-7 Field Test System
1114-4-T/C Exciter Head

Peak Dynamic Force vs. Frequency

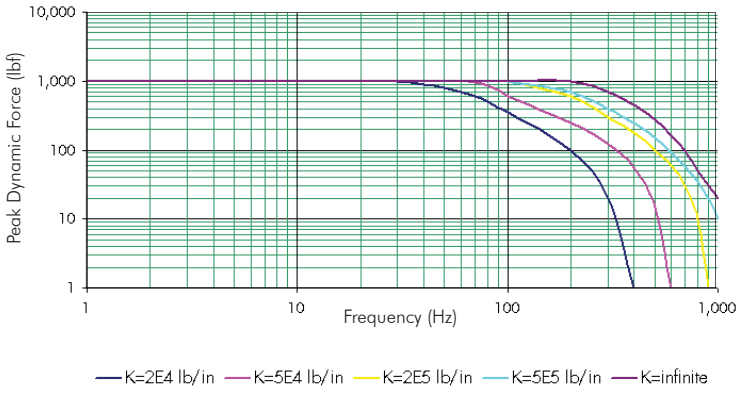

Peak Displacement vs. Frequency

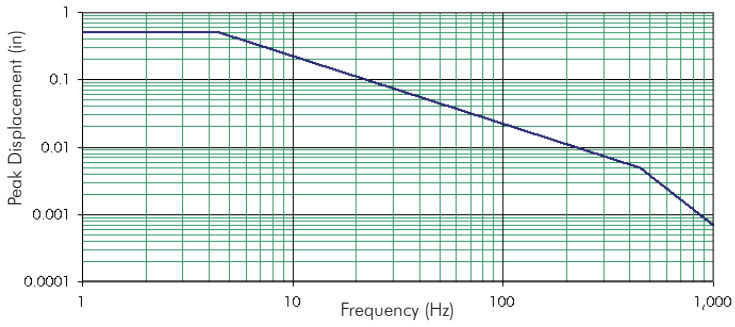

Note: The above force curve is for the Xcite 1114 Head used in Tension/Compression mode with ZERO STATIC FORCE and the load cell rigidly connected to the structure for "PUSH/PULL" operation. In Compression mode only with 500 lbs of Static Force the curves are derated to a maximum of 400-500 lbs Peak Dynamic. (Depending on the structure stiffness of the test article).

XCITE SYSTEMS CORPORATION

CERTIFICATE OF CALIBRATION

Transducer Model:	2522	
Serial Number:	2070	
Capacity:	2500	LBS
Calibration Date:	12/5/2008	
Excitation:	10	VDC
Input Resistance:	355	Ohms
Output Resistance:	356	Ohms
Temperature Range:	50-150	Degrees F

Applied Load in LBS	Compression
0	0.0000
400	0.1704
1000	0.4280
1500	0.6426
2000	0.8571
2500	1.0726

An output of **0.2971** **MV/V** is induced when

a shunt resistor of 301K ohms is applied across (-) Excitation and (-) Signal.

Notes: A shunt resistor of 301k ohms induces an output of 0.2971 MV/V which is equivalent to 692 lbs

Wiring Code:	A	**(+)Excitation**
	B	**(-) Excitation**
	C	**(+)Signal**
	D	**(-) Signal**

This is to certify that the following instrument was calibrated using loading equipment traceable to NIST through one or more of standards. The unit was found to meet or exceed all published sales literature accuracy specifications.

Approved by:

Xcite Systems Corporation • 675 Cincinnati Batavia Pike • Cincinnati, Ohio 45245
Tel: (239) 980-9093 • Fax: (239) 985-0074 • Email: info@xcitesystems.com • Web: www.xcitesystems.com

TRANS-TEK
INCORPORATED
10 Industrial Drive, P.O.Box 338, Ellington, CT 06029 Tel(860)872-8351 Fax(860)872-4211

CALIBRATION RECORD

MODEL NUMBER: 0243-0000

Maximum Nonlinearity: 0.101% F.S.
Calculation Method: Best Fit Straight Line Thru Zero
Calculated Line: Y = 26.8340 X + 0.0000
Working Range: +/- 0.5 inch(es)
Sensitivity: 1.1181 VDC / inch(es) / Volt Input
Tested at: 24.00023 VDC Input and > 1 Megohm Output Load

If the core is not permanently attached to the extension rod, then the transducer was calibrated with the core's marked end towards the transducer's lead end.

CALIBRATION DATA

POSITION	OUTPUT VDC		ERROR
inch(es)	DATA	ZERO ADJUSTED	% F.S.
-0.5000	-13.4471	-13.4441	0.101
-0.4000	-10.7448	-10.7419	0.031
-0.3000	-8.0427	-8.0397	-0.039
-0.2000	-5.3427	-5.3397	-0.101
-0.1000	-2.6611	-2.6581	-0.094
0.0000	-0.0030	0.0000	0.000
0.1000	2.6555	2.6585	-0.093
0.2000	5.3434	5.3464	-0.076
0.3000	8.0540	8.0570	0.025
0.4000	10.7551	10.7580	0.091
0.5000	13.4409	13.4438	0.100

Calibrated by: _____ Date: 06-02-2011
Per S022-0040 Rev.\ # 2

Note: Please refer to attached bulletin for additional information.
BATCH CODE #110602A074744 REF. #: 14

XCITE SYSTEMS CORPORATION

1001P Field Test Power Supply

1. Introduction

The Xcite 1001P Field Test Hydraulic Power Supply is designed to fulfill the power requirements for Xcite Series Controlled Force hydraulic Exciters and other actuators that do not require an average flow of more than 1.5 GPM. This power supply is completely portable and can be used in a wide variety of test environments. It has been "human-engineered" for ease of operation and maintenance. All control functions can be handled by a Xcite Master Controller, enabling a single test operator to effectively run the entire operation.

2. Theory of Operation

2.1. Hydraulic System

A 1.5 GPM constant displacement gear pump is driven directly by a 3 HP 1425/1725 RPM 115 VAC/ 230 VAC electric motor. At 1725 RPM the pump ports a nominal 1.5 GPM which is directed to the pressure quick disconnects through a 5 micron filter. A relief valve maintains a constant 3000 psi output pressure by bleeding flow to the reservoir.

The user must be aware that when more than 1.5 GPM is demanded by the exciter head (low frequency stoke or weak structure stiffness at higher frequencies), the pump pressure will drop. For maximum force capability from the system, the stroke must be limited to ranges which allow the pump to maintain 3000 psi pressure.

A time delayed cooling fan provides air flow across a heat exchanger which is in the return line to cool the hydraulic fluid returning from the exciter head.

For ease of filling and draining of the reservoir before transporting the power supply, a transfer pump is used. When the ball valve is in the *FILL* direction, fluid is pumped from the reservoir fill hose directly into the reservoir. **See Drawing B-30277 - Item #26.** In the *EMPTY* direction, hydraulic fluid is pumped out of the quick disconnect nipple which is removed from the top of the reservoir for the emptying operation. (See photos on the following pages.)

Before using the Hydraulic Power Supply for the first time, the reservoir must be filled with approximately 4 gallons (15 liters) of Mobil DTE hydraulic fluid. See next page for filling instructions.

Access to Rear of 1001P Mini Hydraulic Power Supply for Oil Filling and Draining

Remove screw holding fan door.

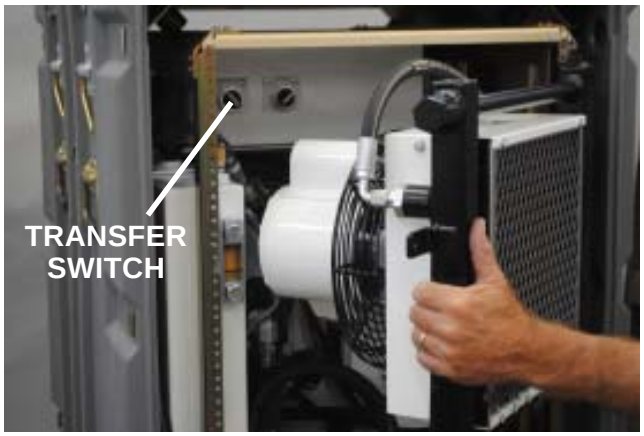

Open fan door and swing out.

Oil Fill Procedure

Set FILL/DRAIN value to fill position.

Insert fill hose into oil container and turn TRANSFER SWITCH to "On" located on Control Box #2.

Oil Drain Procedure

Disconnect oil return line from reservoir by pulling quick disconnect collar towards oil reservoir and hose out of connector.

Set FILL/DRAIN value to drain position.

Insert return line into oil collection container and turn TRANSFER SWITCH to "On" located on Control Box #2. Run pump until oil reservoir is empty.

2.2. Electrical Control System

The Electrical Control System for the 1001P Hydraulic Power Supply is packaged in two enclosures mounted inside the pump cabinet. The first enclosure is accessible from the front panel of the Power Supply by removing four screws and is called “Electrical Control Box #1”. **See Drawing B-30279**
This enclosure contains the fuses for the system designated as:

- 107FU - 4.0 Amp (Fan Motor Fuse)
- 108AFU - 6.0 Amp (115 Volt Operation Fuse)
- 108BFU - 3.0 Amp (230 Volt Operation Fuse)

The second enclosure is mounted near the top of the Power Supply and is only accessible by removing the entire pump assembly from the cabinet. This enclosure is called “Electrical Control Box #2” and contains the motor starter, control relays and control transformer. **See Drawing B-30280**

During operation, either 115 VAC or 230 VAC single phase power is applied to the main contacts of the pump motor starter; the time delay relay of the cooling fan and transformer T1. The voltage selector switch (107PB) selects operation of the entire 1001P Hydraulic Power Supply from either 115 VAC or 230 VAC, 60 Hz. Drawing B-30114 and B-30116 depicts the voltage selector switch in the 230 Volt position. In this position, voltage is applied to the primary coil of transformer T-1 and is “stepped” down to 115 VAC for operation of all control relays and the Xcite Master Controller.

When the voltage selector switch 107PB is switched to the 115V position, 115 VAC power is applied directly to the control relays and the Xcite Master Controller. The Pump Motor (MTR1) and the Fan Motor (MTR2) are automatically converted to 115V operation by switching the windings of MTR1 and MTR2 with control relays 111CR and 112CR respectively.

The 1001P Hydraulic Power Supply is started when the *START* button on the Xcite Master Controller is depressed. 115V control voltage is applied back through J1-D to the “Remote Emergency Stop Connector” (RES); the “Emergency Stop” button and then to the coils of motor starter control relays 115M and 116M. In order for voltage to reach these control relays, the oil level/temperature and filter switches must all be closed. This means there is sufficient oil in the reservoir, the oil temperature is less than 150° F and the oil filter is clean. If these conditions are all met, the control relays 115M and 116M are energized and MTR1 and MTR2 are started.

Pressing the *STOP* button on the pump de-energizes the control relays 115M and 116M and the unit shuts down. Automatic shutdown will also occur if the oil level, temperature or filter switch is momentarily opened.

3. Description

The entire power supply is shock-mounted in a roto-molded plastic instrument style enclosure. Interconnections are easily identified by call-outs on the panels. A power cord is supplied as standard equipment. **See Drawing's B-30276, 30277, 30278, B-30279 and B-30280 at end of this section.** Major Components are:

- A 4-gallon oil reservoir
- Motor
- Constant displacement pump
- A 2-micron filter
- Air/ heat exchanger
- Oil transfer pump
- (2) Electrical control boxes

Procedure to Remove 1001P Mini Pump Hydraulic Power Supply from Cabinet

Remove locking pin from lower left side on the front of the HPS to release unit to be pulled out of cabinet.

Pull unit out of cabinet. CAUTION - unit is front heavy and will tip over if not supported as shown.

Remove top cover to gain access to Control Box #2 internal components.

Along with these major components are a number of controls and condition indicators giving continuous monitoring of supply conditions.

3.1. Pressure Gauge

This gauge indicates the supply pressure at the pump outlet. With no flow, the gage should normaly read 3000 to 3100 psi.

3.2. Power Indicator Lamp

This lamp is illuminated at all times when the electrical power cord is connected to the power outlet.

3.3. Emergency Stop Switch and Remote Emergency Stop Connector

This is a push to stop switch that de-energizes the pump motor starter when depressed. This switch may be used to halt the pump in place of the *STOP* button on the Xcite Master Controller, if necessary. It should be noted that the Emergency Stop Switch **MUST** be pulled out for the 1001P Power Supply to operate. If it is depressed (stays depressed once pushed), the unit will **NOT** operate.

A "Remote Emergency Stop" connector (RES) is also provided to allow the user to wire a remote SPST switch to stop the Power Supply. A mating connector for wiring the remote emergency stop is included.

3.4. Hydraulic Supply and Return Connectors

These are male and female quick-disconnect fittings. The female fitting goes to the supply line; the male fitting goes to the return line.

3.5. HPC Control Connector

This is a 6-pin Amphenol connector used to interface the pump to the Master Controller.

3.6. Oil Level/ Temperature Gauge

This gauge indicates the level of oil in the reservoir. It is mounted directly to the oil reservoir. The system should not be operated with less than 3.5 gallons of oil. An oil temperature gage is also supplied which measures the temperature of the oil in the reservoir.

3.7. Voltage Selector Switch

This switch allows the 1001P Hydraulic Power Supply to be used with either 115 VAC or 230 VAC 50/60 Hz power, single phase. **See 2.2. and B-30280**

3.8. Fuses

All replaceable fuses are mounted in Electrical Box #1 on the front panel of the Power Supply. **See 2.2.** for appropriate ratings and **Drawing B-30279** for location.

3.9. Oil Level/ Temperature Switches

These switches are located inside the reservoir. One switch shuts down the unit if the oil level is too low (below 3.1 gallons) and the other switch shuts down the unit if the oil temperature exceeds 140° F. Both switches have red indicator lights on the front panel to alert for these conditions.

3.10. Filter Switch

The filter switch is mounted on the filter assembly, located at the output of the Hydraulic Pump Assembly. If the differential pressure across the filter element exceeds 50 psi, the switch is activated and the red filter light illuminates. If this occurs, it generally indicates that the filter element is dirty and needs replacement.

4. Preliminary to Operation

Several preparatory steps must be taken prior to operating the unit.

4.1. Remove the front and rear cabinet covers.

4.2. Turn the voltage selector switch to the correct position for the line voltage being used. (Nominally 220V) If the 110 V range is selected, it is also necessary to connect a jumper wire located in “Electrical Control Box #2”.
See Drawing B-30278 and photo below.

Connect Jumper “X2” at transformer for 110V operation.

4.3. Connect the hydraulic supply and return lines to the front panel quick-disconnects.

4.4. Connect the power cord to the power source, making sure that the power indicator lamp is lit. Use black and white wires for voltage, green for ground. The red wire is NOT used.

NOTE: The unit should NEVER be operated with the hoses coiled, nor should anything be set on the hoses, nor should they be driven over.

Oil should not be mixed. If the type of oil is changed, purge the system.

4.5. Check the level of the oil using the sight gauge on the back of the reservoir. The oil reservoir should be completely filled with Mobil DTE-24 or DTE-25. If necessary fill the reservoir using the transfer pump. **See 2.1.**

4.6. Connect the Pump Control Cable (from the Master Controller) to the connector on the front panel.

4.7. Make sure the front and rear of the cabinet are not obstructed by anything that would restrict the flow of air into and out of the cabinet.

4.8. Press the *PUMP START* button on the Master Controller to start the pump. To stop the unit, press the *PUMP STOP* button on the Master Controller or the *EMERGENCY STOP* button on the pump's front panel.

4.9. Check the pressure gauge and verify the pump is operating at 3000 to 3200 psi. Failure to comply with the above can cause severe damage to the servovalve, exciter head, and pump. All warranties are invalidated if damage occurs due to overpressure.

4.10. In the event the hydraulic power supply will not start, check for oil over temperature, or low oil level; or if the power supply starts but will not run continuously, the filter element is clogged and needs replacement.

5. Care and Maintenance

5.1. General

The pump requires little regularly-scheduled maintenance. However, you should keep the unit reasonably clean and should observe the following precautions.

5.1.1. Keep the quick-disconnect dust covers installed whenever the unit is not in use.

5.1.2. Always clean the quick-disconnects before making any connections.

5.1.3. Make sure the heat exchanger fan is not blocked during operation.

The only periodic maintenance required is change the oil every 2000 hours and change the filter whenever it becomes clogged. The filter unit consists of a screw-off canister and replaceable filter element.

5.2. Field Test Reservoir Draining/ Refilling Procedure

This is a closed-loop system. If general cleanliness methods are followed, the filter should not require replacement for long periods of time. Oil should be changed every 2000 hours of pump operation.

If the supply is to be transported such that the cabinet could be tipped over, the oil should be drained from the reservoir. See draining and filling procedure in **Section 2.1.**

5.3. Change Oil Filter

Unscrew the bottom of the container and change the cartridge.
Use Parker Filter #932610Q

6. Troubleshooting

This section lists the most common problems encountered, as well as their probable causes. If the problem cannot be readily corrected, contact your Xcite Customer Service Representative.

Problem	Probable Cause
Power lamp is not lit when unit is plugged in.	Check power source.
Fuses blown.	Low line voltage or motor malfunction.
Low hydraulic pressure (less than 3000 psi.)	Excessive flow beyond 1.5GPM.
	Defective relief valve

7. Specifications

Dimensions	
Height	37.5”
Width	27”
Depth	36.5”
Weight (without oil)	430 lbs
Cooling	Air (heat exchanger w/ fan)
Maximum Ambient Air Temp	100° F
Power Requirements from Circuit Mains	115 VAC, 40 Amp, single-phase 230 VAC, 25 Amp, single-phase
Oil Type	Mobil DTE-24 or DTE-25 (DO NOT MIX OIL TYPES)
Oil Required in Reservoir	Approximately 4 gallons (15 liters)
Operating Pressure	3300 psi +/- 200 psi
Pressure Control	Spring operated relief valve
Pump	1.5GPM constant displacement at 1725 rpm @ 60Hz 1.2GPM constant displacement at 1425 rpm @ 50Hz
Motor (Full Load)	3 hp, single-phase; 115VAC@32 Amps; 220VAC@16 Amps; 1725 rpm; 184 TC frame size
Radiated Noise (at 3 ft. from cabinet)	Front - 77 dBA Side - 72 dBA Rear - 80 dBA

8. Drawings

Pump/ Reservoir	B-30276 (2 sheets)
Hydraulic System Schematic	B-30277 (2 sheets)
Electrical Schematic	B-30278 (2 sheets)
Electrical Control Box #1	B-30279
Electrical Control Box #2	B-30280

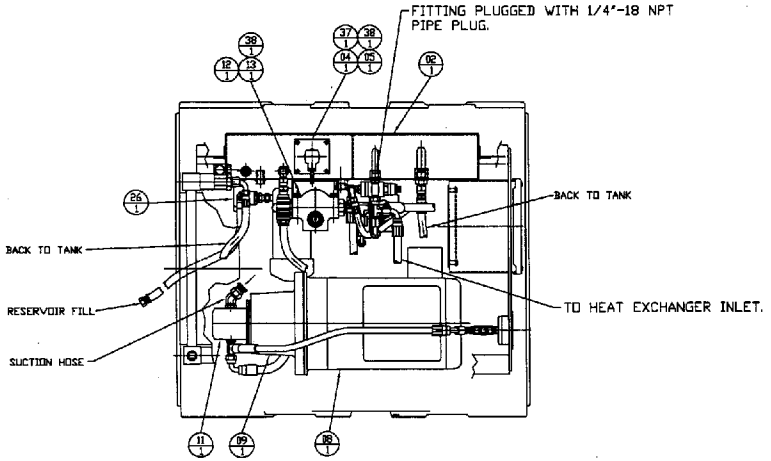

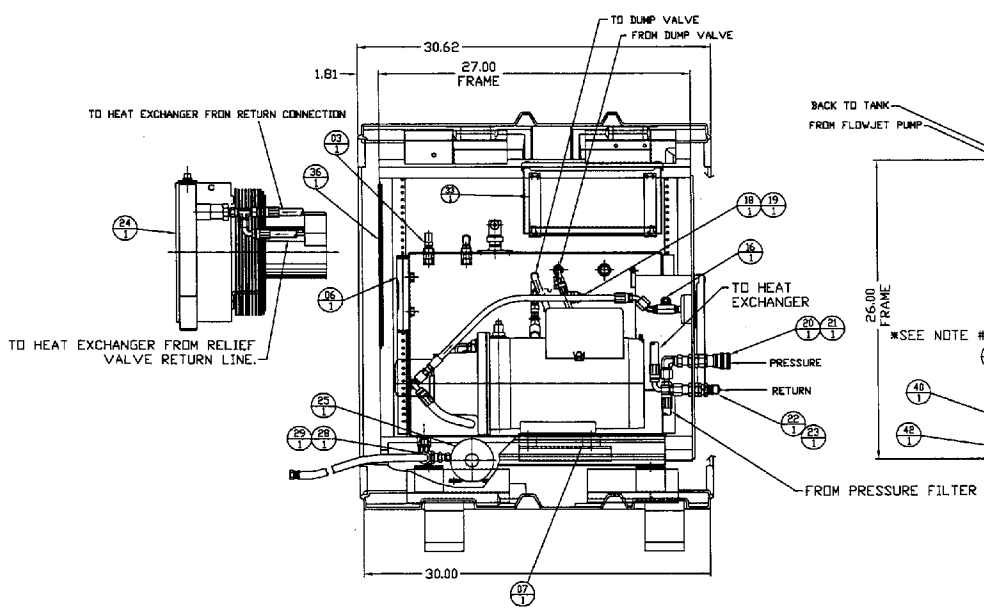

NOTE: AOC-19 AIR/OIL HEAT EXCHANGER NOT SHOWN ATTACHED TO CASE FRAME IN FRONT VIEW.

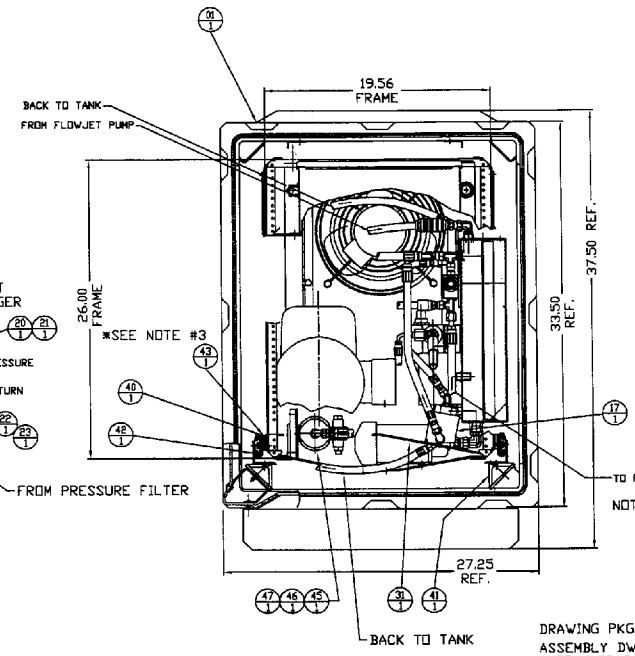

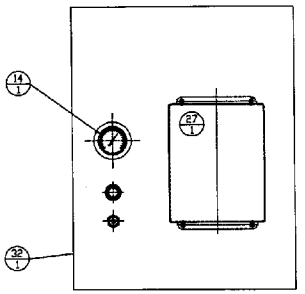

NOTE: HOFFMAN ENCLOSURE & PLATE NOT SHOWN ATTACHED TO CASE FRAME IN SIDE VIEW.

DRAWING PKG.:

ASSEMBLY DWG. B-30276 SHT'S 1& 2 (12844-R00-S01& S02).
HYDRAULIC SCHEMATIC DWG. B-30277 SHT. 1 (12842-R00-S01).
PARTS LIST (MECHANICAL) DWG. B-30277 SHT. 2 (12842-R00-S02).
ELECTRICAL SCHEMATIC DWG. B-30278 SHT 1 (12843-R00-S01).
PARTS LIST (ELECTRICAL) DWG. B-30278 SHT 2 (12843-R00-S02).
ELECTRICAL CONTROL BOX #1 DWG. B-30279 (12845-R00-S01).
ELECTRICAL CONTROL BOX #2 DWG. B-30280 (12846-R00-S01).

NOTES.

1): FRAME & SLIDE (ITEM #40) HAS 18" OF TRAVEL.
2): A LOCKING PIN IS INSERTED IN ITEM #41 TO CAPTURE THE POWER UNIT.
3): PAINT FACE OF FRONT PANEL (ITEM #32).
4): NOT ALL ITEMS SHOWN IN ALL VIEWS FOR CLARITY.
5): MODIFY ISOLATION MOUNTS SHIPPED WITH CASE TO LIMIT RACKING OF UNIT INSIDE CASE.

CONFIDENTIAL DOCUMENT: PROPRIETARY INFORMATION NOT TO BE DISCLOSED TO OTHERS WITHOUT CONSENT OF TRIAD TECHNOLOGIES LLC. THIS DOCUMENT AND OTHER INFORMATION FROM TRIAD TECHNOLOGIES LLC PROVIDE PRODUCT AND/OR SYSTEM OPTIONS FOR FUTURE INVESTIGATION BY USERS HAVING TECHNICAL EXPERTISE. BEFORE YOU SELECT OR USE ANY PRODUCT OR SYSTEM, IT IS IMPORTANT THAT YOU ANALYZE ALL ASPECTS OF YOUR APPLICATION AND REVIEW THE INFORMATION CONCERNING THE PRODUCT OR SYSTEM IN THE CURRENT PRODUCT CATALOG. DUE TO THE VARIETY OF OPERATING CONDITIONS AND APPLICATIONS FOR THESE PRODUCTS OR SYSTEMS, THE USER, THROUGH ITS OWN ANALYSIS AND TESTING IS SOLELY RESPONSIBLE FOR MAKING THE FINAL SELECTION OF THE PRODUCTS AND SYSTEMS AND ASSURING THAT ALL PERFORMANCE, SAFETY AND WARNING REQUIREMENTS OF THE APPLICATION ARE MET.

12844-R00-S01

TRIAD ITEM I.D. # ESD-130-00029-06-11

THIS DRAWING IS TO BE INTERPRETED USING THE LATEST REVISION OF ANSI/ASME Y14 DRAFTING STANDARDS

THIRD ANGLE PROJECTION

UNLESS OTHERWISE SPECIFIED ALL DIMS ARE IN INCHES TOLERANCES ARE:
DECIMAL 0.XX ± .01
0.XXX ± .005
0.XXXX ± .0005
FRACTIONS ± 1/32
ANGULAR ± 1°
BREAK SHARP CORNERS

AutoCAD LT 2006

DRAWN JAS DATE 06-30-11
APPD
DWG # ESD113938
REF. DWG # 12095-R00-S01
REF. DWG 1001464
CHECKED
APPROVED

XCITE SYSTEMS CORPORATION

DRAWING TITLE: ASSEMBLY, 1001P HYD. POWER SUPPLY

SIZE 1001464 | B | DWG NO. 30276 | REV 0

CUSTOMER XCITE SYSTEMS | SCALE 1/4 | SHEET 1 of 2

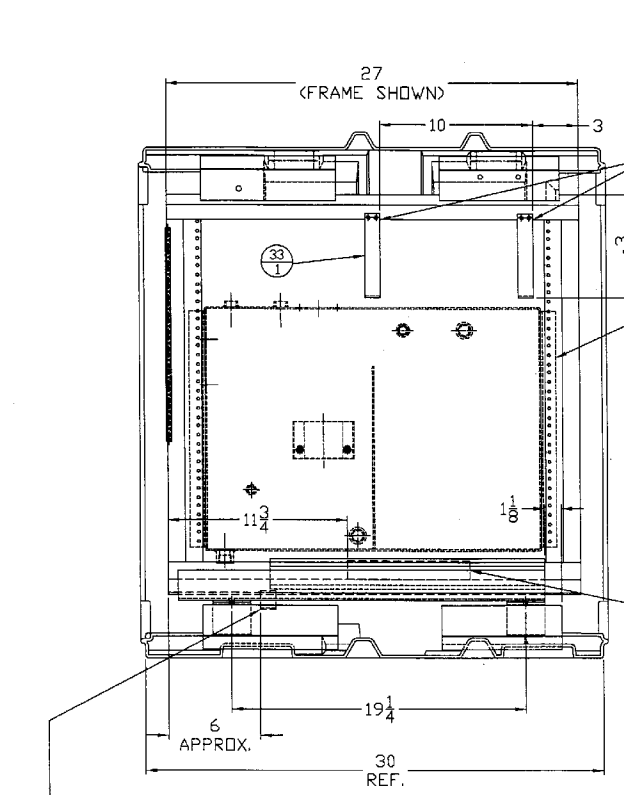

LOCATE AT LEAST (2) HOLES PER SIDE ON ITEM #33.
DR.Ø9/32 THRU HOLES IN FRAME ANGLE
SECURE W/ 1/4-20 X 3/8"B.H.C.S.

LOCATE AT LEAST (5) HOLES PER SIDE ON ITEM #2
DR.Ø7/32 THRU HOLES IN 1 X 1 ANGLE BRACKET
SECURE W/ 10-32 X 3/8"B.H.C.S.

LOCATE AT LEAST (2) HOLES PER SIDE ON ITEM #31.
DR.Ø9/32 THRU HOLES IN FRAME ANGLE
SECURE W/ 1/4-20 X 3/8"B.H.C.S.

LOCATE AT LEAST (1) HOLE PER SIDE ON ITEM #34
DR.Ø7/32 THRU HOLES IN FAME ANGLE
SECURE W/ 10-32 X 3/8"B.H.C.S.

LOCATE AT LEAST (5) HOLES ON ITEM #36
DR.Ø7/32 THRU HOLES IN FRAME ANGLE
SECURE W/ 10-32 X 3/8"B.H.C.S.

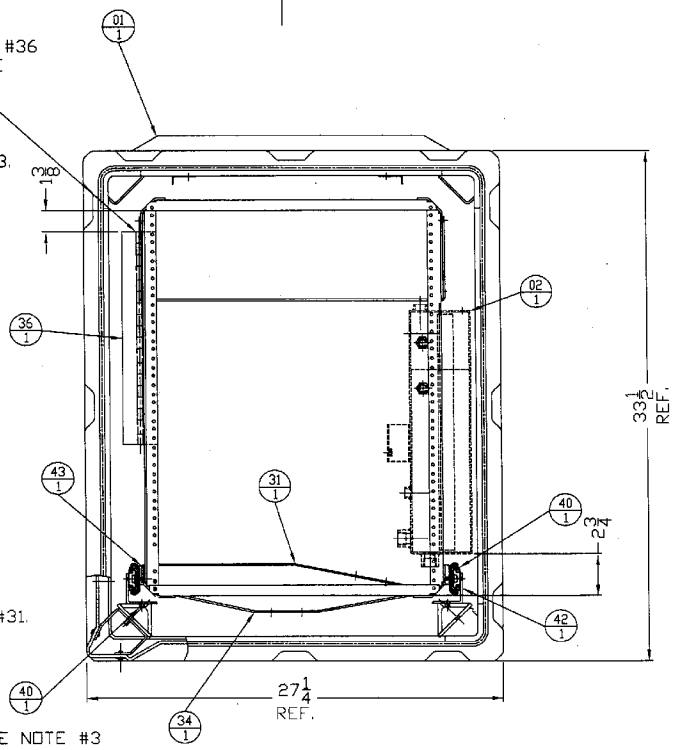

*SEE NOTE #3

DRAWING PKG.:

ASSEMBLY DWG. B-30276 SHT'S 1& 2 (12844-R00-S01& S02).
HYDRAULIC SCHEMATIC DWG. B-30277 SHT. 1 (12842-R00-S01).
PARTS LIST (MECHANICAL) DWG. B-30277 SHT. 2 (12842-R00-S02).
ELECTRICAL SCHEMATIC DWG. B-30278 SHT 1 (12843-R00-S01).
PARTS LIST (ELECTRICAL) DWG. B-30278 SHT 2 (12843-R00-S02).
ELECTRICAL CONTROL BOX #1 DWG. B-30279 (12845-R00-S01).
ELECTRICAL CONTROL BOX #2 DWG. B-30280 (12846-R00-S01).

12844-R00-S01

TRIAD ITEM I.D. # ESD-130-00029-06-11	DRAWN JAS	DATE 06-30-11	XCITE SYSTEMS CORPORATION
THIS DRAWING IS TO BE INTERPRETED USING THE LATEST REVISION OF ANSI/ASME Y14 DRAFTING STANDARDS	RELEASED	DATE	DRAWING TITLE: ASSEMBLY, 1001P HYD. POWER SUPPLY
UNLESS OTHERWISE SPECIFIED ALL DIMS ARE IN INCHES TOLERANCES ARE: DECIMAL 0.XX ± .01, 0.XXX ± .005, 0.XXXX ± .0005; FRACTIONS ± 1/32; ANGULAR ± 1°; BREAK SHARP CORNERS	QUOTE # ESD113983	REF. DWG. 12095-R00-S01	PRODUCTION ORDER # 1004889
THIRD ANGLE PROJECTION	REF. JOB 1001464	CUSTOMER PART #	SIZE B DWG. NO. 30276 REV 0
AutoCAD LT 2006	CUSTOMER DWG #	CUSTOMER XCITE SYSTEMS	SCALE 1/4 SHEET 2 OF 2

THIS DRAWING IS PROPRIETARY INFORMATION NOT TO BE DISCLOSED TO OTHERS WITHOUT CONSENT OF TRIAD TECHNOLOGIES LLC. THIS DOCUMENT AND OTHER INFORMATION FROM TRIAD TECHNOLOGIES LLC. PROVIDE PRODUCT AND/OR SYSTEM OPTIONS FOR FUTURE INVESTIGATION BY USERS HAVING TECHNICAL EXPERTISE. BEFORE YOU SELECT OR USE ANY PRODUCT OR SYSTEM, IT IS IMPORTANT THAT YOU ANALYZE ALL ASPECTS OF YOUR APPLICATION AND REVIEW THE INFORMATION CONCERNING THE PRODUCT OR SYSTEM IN THE CURRENT PRODUCT CATALOG. DUE TO THE VARIETY OF OPERATING CONDITIONS AND APPLICATIONS FOR THESE PRODUCTS OR SYSTEMS, THE USER, THROUGH ITS OWN ANALYSIS AND TESTING IS SOLELY RESPONSIBLE FOR MAKING THE FINAL SELECTION OF THE PRODUCTS AND SYSTEMS AND ASSURING THAT ALL PERFORMANCE, SAFETY AND WARNING REQUIREMENTS OF THE APPLICATION ARE MET.

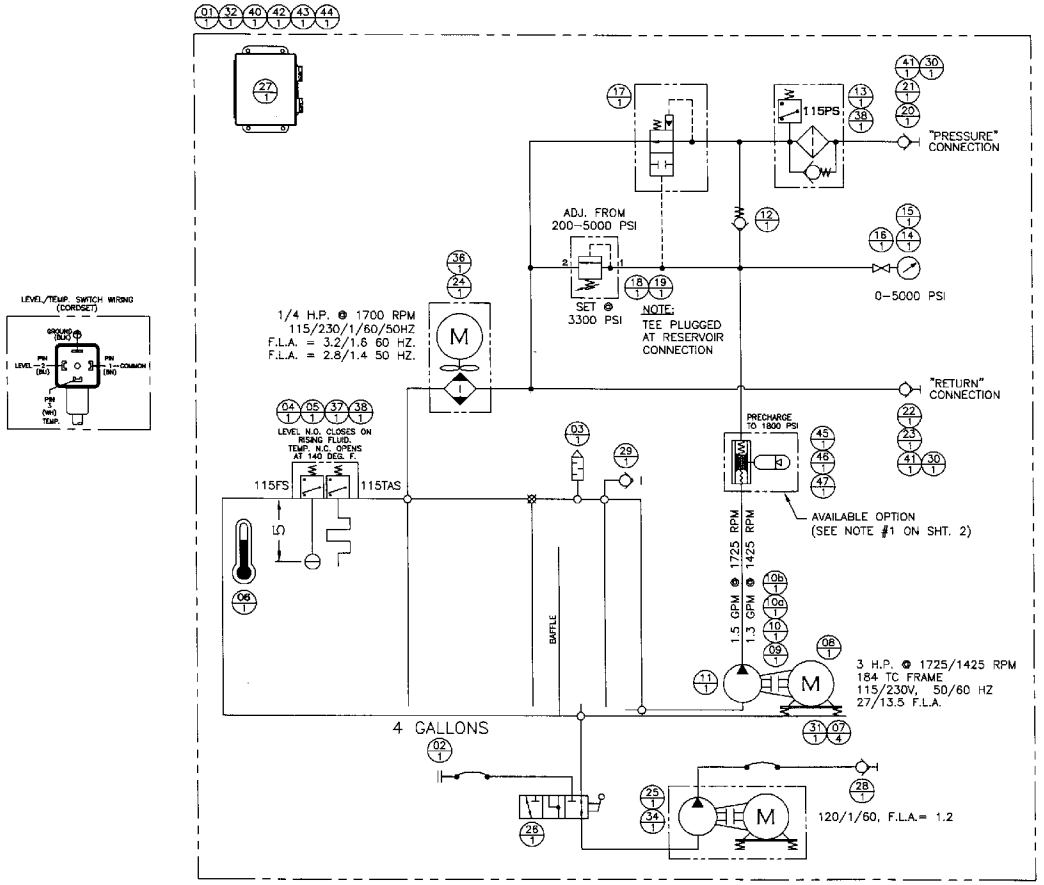

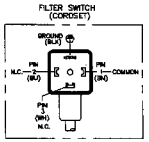

DRAWING PKG.:

ASSEMBLY DWG. B-30276 SHT'S 1 & 2 (12844-R00-S01& S02).
HYDRAULIC SCHEMATIC DWG. B-30277 SHT. 1 (12842-R00-S01).
PARTS LIST (MECHANICAL) DWG. B-30277 SHT. 2 (12842-R00-S02).
ELECTRICAL SCHEMATIC DWG. B-30278 SHT 1 (12843-R00-S01).
PARTS LIST (ELECTRICAL) DWG. B-30278 SHT 2 (12843-R00-S02).
ELECTRICAL CONTROL BOX #1 DWG. B-30279 (12845-R00-S01).
ELECTRICAL CONTROL BOX #2 DWG. B-30280 (12846-R00-S01).

12842-R00-S01

TRIAD ITEM I.D.# ESD-130-0002906-11

THIS DRAWING IS TO BE INTERPRETED USING THE LATEST REVISION OF ANSI/ASME Y14 DRAFTING STANDARDS

UNLESS OTHERWISE SPECIFIED
ALL DIMS ARE IN INCHES
TOLERANCES ARE:
DECIMAL 0.XX ± .01
0.XXX ± .005
0.XXXX ± .0005
FRACTIONS ± 1/32
ANGULAR ± 1°
BREAK SHARP CORNERS

THIRD ANGLE PROJECTION

AutoCAD LT 2006

DRAWN JAS DATE 06-30-11
RELEASED DATE
QUOTE # ESD113983
REF. DWG 12093-R00-S01
REF. JOB 1001464
CUSTOMER PARTS #
CUSTOMER DWG #

XCITE SYSTEMS CORPORATION

DRAWING TITLE
SCHEMATIC, HYDRAULIC
1001P HYD. POWER SUPPLY

PRODUCTION ORDER # 1004889
SIZE B DWG NO 30277 REV 0
CUSTOMER XCITE SYSTEMS
SCALE NONE SHEET 1 OF 2

CONFIDENTIAL DOCUMENT: PROPRIETARY INFORMATION NOT TO BE DISCLOSED TO OTHERS WITHOUT CONSENT OF TRIAD TECHNOLOGIES LLC. THIS DOCUMENT AND OTHER INFORMATION FROM TRIAD TECHNOLOGIES LLC, PROVIDE PRODUCT AND/OR SYSTEM OPTIONS FOR FURTHER INVESTIGATION BY USERS HAVING TECHNICAL EXPERTISE. BEFORE YOU SELECT OR USE ANY PRODUCT OR SYSTEM, IT IS IMPORTANT THAT YOU ANALYZE ALL ASPECTS OF YOUR APPLICATION AND REVIEW THE INFORMATION CONCERNING THE PRODUCT OR SYSTEM IN THE CURRENT PRODUCT CATALOG. DUE TO THE VARIETY OF OPERATING CONDITIONS AND APPLICATIONS FOR THESE PRODUCTS OR SYSTEMS, THE USER, THROUGH ITS OWN ANALYSIS AND TESTING IS SOLELY RESPONSIBLE FOR MAKING THE FINAL SELECTION OF THE PRODUCTS AND SYSTEMS AND ASSURING THAT ALL PERFORMANCE, SAFETY AND WARNING REQUIREMENTS OF THE APPLICATION ARE MET.

PARTS LIST – BILL OF MATERIAL

ITEM	QTY	MFG.	PART#	DESCRIPTION
01	1	ZERO	ZDR1430-0303-G-LR	CASE, WITH LIFTING RINGS
02	1	FITZPATRICK	11885-R03-S01	RESERVOIR, 4 GALLON
03	1	PARKER	EM37	MUFFLER
04	1	ACT	B40033AFD2B608W048	SWITCH, LEVEL/TEMP, B4030N-60N-NO-W048
05	1	TRIAD	D-5013-A-01	COVER, LEVEL/TEMP, SWITCH (LSCP-300)
06	1	HYDRO-CRAFT	HSG-66T-3	GAUGE, SIGHT LEVEL/TEMPERATURE
07	4	TECH PRODUCTS	51384	MOUNT, ISOLATION
08	1	BALDOR	36E010X304G1	MOTOR, 3HP @ 1725/1425 RPM, ODP "C" FACE WITH BASE, 184TC FRAME, 115/230, 50/60 HZ.
09	1	VESCOR	2196	ADAPTOR, MOTOR/PUMP
10	1	MAGNALOY	M10010408	HUB, MOTOR COUPLING (1 1/8" x 1/4")
10A	1	MAGNALOY	M10001604	HUB, PUMP COUPLING (1/2" x 1/8")
10B	1	MAGNALOY	M170N8	INSERT, COUPLING
11	1	MARZOCCHI	GH1P1A-D-5	PUMP, GEAR (.21 CU. IN/REV)
12	1	PARKER	C820S80	VALVE, CHECK
13	1	PARKER	15P1020BE2KS121	FILTER, PRESSURE (REPLACEMENT ELEMENT #932610Q)
14	1	NOSHOK	25-310-SST-5000-PSI/BAR ORF	GAUGE, PRESSURE
15	1	NOSHOK	25-3 CFF	FLANGE, GAUGE
16	1	NOSHOK	NSA8-KXV-HH	SNUBBER, GAUGE
17	1	BOSCH	AD-P1-51F-10	VALVE, ACCUMULATOR DUMP
18	1	PARKER	RAH101S50	VALVE, CARTRIDGE RELIEF
19	1	PARKER	B10-2-6T	BODY, CARTRIDGE VALVE
20	1	PARKER	H3-62-T8	COUPLER, QUICK CONNECT
21	1	PARKER	H3-65	PLUG, DUST
22	1	PARKER	H3-63-T8	NIPPLE, QUICK COUPLER
23	1	PARKER	H3-66	CAP, DUST
24	1	THERMAL TRANS.	AOC-19-2-60-1 PH	COOLER, AIR/OIL WITH SINGLE PHASE MOTOR
25	1	FLOJET	D3635B7011A	PUMP, (TRANSFER)
26	1	APOLLO	70-643-01	VALVE, DIVERTER BALL
27	1	PANEL CONTROL	12843-R00-S01& S02	PACKAGE, ELECTRICAL (11-168)
28	1	PARKER	H5EP	NIPPLE, PUSH-LOK QUICK COUPLER
29	1	PARKER	25	COUPLER, QUICK CONNECT
30	1	McMASTER-CARR	8923T321	ROPE, 7 X 7 STRAND CORE GALV. STEEL
31	1	TRIAD	11887-R00-S01	PLATE, MOTOR MOUNTING
32	1	TRIAD	11890-R00-S01	PANEL, FRONT
33	2	TRIAD	11889-R00-S01	BRACKET, ELECTRICAL ENCLOSURE MOUNTING
34	1	TRIAD	11888-R00-S01	BRACKET, FLOJET PUMP
35	1	TRIAD	12092-R00-S01	TAGS, 1 SET (1001P)
36	1	McMASTER-CARR	15665A176	HINGE, 1 1/2" x .050"
37	1	HIRSCHMANN	931297-004	ADAPTOR, MALE NPT TO DIN, 3 PIN + GRD.
38	2	TURCK	VAS 3-A580-5M	CONNECTOR, 0-250 VAC/VDC DIN, NO CIRCUIT, 3 PIN + H12 GROUND 5M LONG CABLE
39	1	VESCOR	1020	COUPLING, #4 SAE
40	1	McMASTER-CARR	1277A82	SLIDE, DRAWER (SET)
41	6	McMASTER-CARR	3896T2	SLEEVE
42	4	TRIAD	11952-R00-S01	BRACKET, FRAME MOUNTING
43	1	TRIAD	11956-R00-S01	BRACKET, SLIDE MOUNTING (SET)
44	1	TRIAD	11957-R00-S01	SPACERS, FRAME AND SLIDE
*45	1	PARKER	PT250D1HTB	SUPRESSOR, IN-LINE SHOCK
*46	1	PARKER	8700110252	CLAMP, MOUNTING
*47	1	TRIAD	12886-R00-S01	BRACKET, SHOCK SUPRESSOR MOUNTING
48				
49				
50				

NOTES:

1. * INDICATES OPTION NOT SUPPLIED ON ALL UNITS

DRAWING PKG.:

ASSEMBLY DWG. B-30276 SHT'S 1& 2 (12844-R00-S01& S02).
HYDRAULIC SCHEMATIC DWG. B-30277 SHT. 1 (12842-R00-S01).
PARTS LIST (MECHANICAL) DWG. B-30277 SHT. 2 (12842-R00-S02).
ELECTRICAL SCHEMATIC DWG. B-30278 SHT 1 (12843-R00-S01).
PARTS LIST (ELECTRICAL) DWG. B-30278 SHT 2 (12843-R00-S02).
ELECTRICAL CONTROL BOX #1 DWG. B-30279 (12845-R00-S01).
ELECTRICAL CONTROL BOX #2 DWG. B-30280 (12846-R00-S01).

12842-R00-S02

TRIAD ITEM I.D.#	ESD-130-00029-06-11	DRAWN JAS	DATE 06-30-11
		RELEASED	DATE
		QUOTE #	ESD113983
		REF. DWG.	12093-R00-S01
		PO# JOB	1001464
		CUSTOMER PROM	
		CUSTOMER DWG#	

THIS DRAWING IS TO BE INTERPRETED USING THE LATEST REVISION OF ANSI/ASME Y14 DRAFTING STANDARDS

THIRD ANGLE PROJECTION

UNLESS OTHERWISE SPECIFIED ALL DIMS ARE IN INCHES TOLERANCES ARE:
DECIMAL C.XX ± .01
0.XXX ± .005
0.XXXX ± .0005
FRACTIONS ± 1/32
ANGULAR ± 1°
BREAK SHARP CORNERS

AutoCAD LT 2006

XCITE SYSTEMS CORPORATION

DRAWING TITLE: **PARTS LIST, HYDRAULIC 1001P HYD. POWER SUPPLY**

PRODUCTION/ASSY #	SIZE	DWG NO	REV
1004889	B	30277	0
SUBWORK# XCITE SYSTEMS	SCALE NONE	SHEET 2 OF 2	

CONFIDENTIAL DOCUMENT. PROPRIETARY INFORMATION NOT TO BE DISCLOSED TO OTHERS WITHOUT CONSENT OF TRIAD TECHNOLOGIES LLC. THIS DOCUMENT AND OTHER INFORMATION FROM TRIAD TECHNOLOGIES LLC. PROVIDE PRODUCT AND/OR SYSTEM OPTIONS FOR FURTHER INVESTIGATION BY USERS HAVING TECHNICAL EXPERTISE. BEFORE YOU SELECT OR USE ANY PRODUCT OR SYSTEM, IT IS IMPORTANT THAT YOU ANALYZE ALL ASPECTS OF YOUR APPLICATION AND REVIEW THE INFORMATION CONCERNING THE PRODUCT OR SYSTEM IN THE CURRENT PRODUCT CATALOG. DUE TO THE VARIETY OF OPERATING CONDITIONS AND APPLICATIONS FOR THESE PRODUCTS OR SYSTEMS, THE USER, THROUGH ITS OWN ANALYSIS AND TESTING IS SOLELY RESPONSIBLE FOR MAKING THE FINAL SELECTION OF THE PRODUCTS AND SYSTEMS AND ASSURING THAT ALL PERFORMANCE, SAFETY AND WARNING REQUIREMENTS OF THE APPLICATION ARE MET.

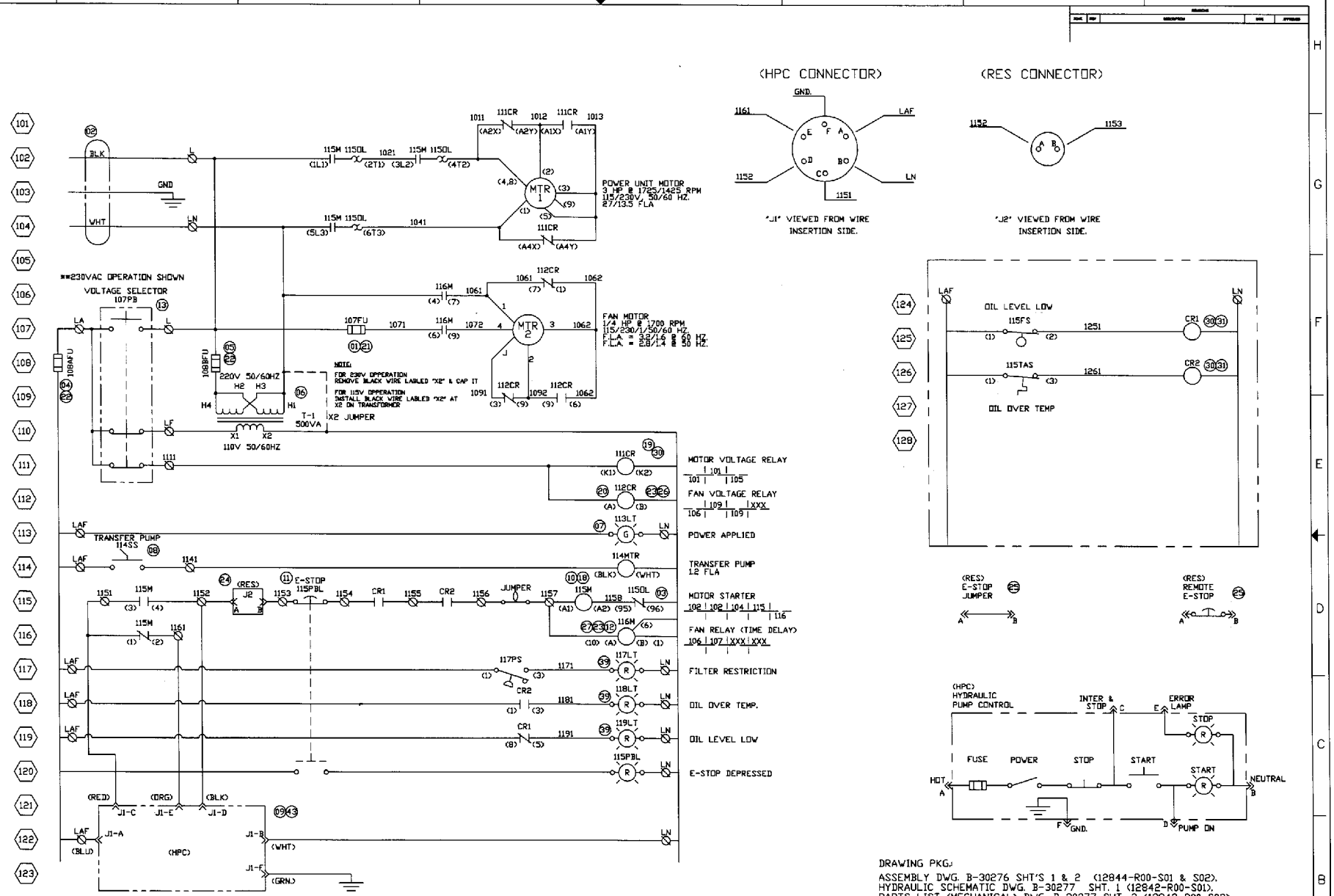

DRAWING PKG.:

ASSEMBLY DWG. B-30276 SHT'S 1 & 2 (12844-R00-S01 & S02).
HYDRAULIC SCHEMATIC DWG. B-30277 SHT. 1 (12842-R00-S01).
PARTS LIST (MECHANICAL) DWG. B-30277 SHT. 2 (12842-R00-S02).
ELECTRICAL SCHEMATIC DWG. B-30278 SHT 1 (12843-R00-S01).
PARTS LIST (ELECTRICAL) DWG. B-30278 SHT 2 (12843-R00-S02).
ELECTRICAL CONTROL BOX #1 DWG. B-30279 (12845-R00-S01).
ELECTRICAL CONTROL BOX #2 DWG. B-30280 (12846-R00-S01).

NOTES:

1. ELECTRICAL COMPONENTS ARE TO BE HELD IN PLACE WITH RETAINING CLIPS/DEVICES.

12843-R00-S01

TRIAD ITEM NO. # ESD-130-00029-06-11	DRAWN JAS	DATE 08-05-11	XCITE SYSTEMS CORPORATION
THIS DRAWING IS TO BE INTERPRETED USING THE LATEST REVISION OF ANSI/ASME Y14 DRAFTING STANDARDS	UNLESS OTHERWISE SPECIFIED ALL DIMS ARE IN INCHES TOLERANCES ARE: DECIMAL 0.XX ± .01, 0.XXX ± .005, 0.XXXX ± .0005; FRACTIONS ± 1/32; ANGULAR ± 1°; BREAK SHARP CORNERS	DWG. SIZE ESD113983	SCHEMATIC, ELECTRIC 1001P HYD. POWER SUPPLY
THIRD ANGLE PROJECTION	AutoCAD LT 2006	REF. DWG. 12094-R00-S01; REF. JOB 1001464	DWG. 1004889 · SIZE B · DWG. NO. 30278 · REV. 0
			CAGE XCITE SYSTEMS · SCALE NONE · SHEET 1 OF 2

CONFIDENTIAL DOCUMENT: PROPRIETARY INFORMATION NOT TO BE DISCLOSED TO OTHERS WITHOUT CONSENT OF TRIAD TECHNOLOGIES LLC. THIS DOCUMENT AND OTHER INFORMATION FROM TRIAD TECHNOLOGIES LLC PROVIDE PRODUCT AND/OR SYSTEM OPTIONS FOR FUTURE INVESTIGATION BY USERS HAVING TECHNICAL EXPERTISE. BEFORE YOU SELECT OR USE ANY PRODUCT OR SYSTEM, IT IS IMPORTANT THAT YOU ANALYZE ALL ASPECTS OF YOUR APPLICATION AND REVIEW THE INFORMATION CONCERNING THE PRODUCT OR SYSTEM IN THE CURRENT PRODUCT CATALOG. DUE TO THE VARIETY OF OPERATING CONDITIONS AND APPLICATIONS FOR THESE PRODUCTS OR SYSTEMS, THE USER, THROUGH ITS OWN ANALYSIS AND TESTING IS SOLELY RESPONSIBLE FOR MAKING THE FINAL SELECTION OF THE PRODUCTS AND SYSTEMS AND ASSURING THAT ALL PERFORMANCE, SAFETY AND WARNING REQUIREMENTS OF THE APPLICATION ARE MET.

ITEM	QTY.	MFG.	MODEL NUMBER	DESCRIPTION
01	1	BUSSMAN	BC6031S	FUSE BLOCK
02	25FT	CARDL	SO 10-4	LINE CORD, 10AWG, 4 COND.
03	1	ALLEN BRADLEY	193-EEFD	RELAY, OVERLOAD, SET AT 20A
04	1	BUSSMANN	FNQ-R-6	FUSE, 6A
05	1	BUSSMANN	FNQ-R-3	FUSE, 3A
06	1	HEVI-DUTY	E500	TRANSFORMER, 500VA
07	1	ALLEN BRADLEY	800T-QT10G	PILOT LIGHT, GREEN, 120VAC, PUSH-TO-TEST
08	1	ALLEN BRADLEY	800T-H2D1	SELECTOR SWITCH, 2POS. MAINTAINED
09	1	AMPHENOL	97-3102A1812-S	CONNECTOR, MS
10	1	ALLEN BRADLEY	100-SA11	CONTACT BLOCK, AUXILIARY, 1 N.O., 1 N.C.
11	1	ALLEN BRADLEY	800T-FXP16RA1	PUSH-BUTTON, 2POS., MAINTAINED, E-STOP
12	1	ALLEN BRADLEY	700-HR52TA17	RELAY, TIME DELAY, 5A, 10SEC
13	1	ALLEN BRADLEY	800T-H2B	SELECT. SWITCH, 2 POS., MAINTAINED
14	1	HOFFMAN	A-14125C	ENCLOSURE, 14x12x4
15	1	HOFFMAN	A-14P12	PANEL, 14x12
16	1	HOFFMAN	A-10086SC	ENCLOSURE, 10x8x6
17	1	HOFFMAN	A-10P8	PANEL, 10x8
18	1	ALLEN BRADLEY	100-C37D00	CONTACTOR, 37A
19	1	ALLEN BRADLEY	700-PK200A1	CONTACTOR RELAY
20	1	ALLEN BRADLEY	700-HB32A1	RELAY, 10A, DPDT
21	1	BUSSMANN	LP-CC-4	FUSE, 4A, CLASS CC
22	1	BUSSMANN	CHCC2DI	FUSE HOLDER
23	1	ALLEN BRADLEY	700-HN154	SOCKET RELAY
24	1	AMPHENOL	97-3102A-10SL-04P	PLUG, MS
* 25	2	AMPHENOL	97-3106A-10FL-04S	CONNECTOR, MS
26	1	ALLEN BRADLEY	700-HN160	RELAY RETAINER CLIP
27	1	ALLEN BRADLEY	700-HN100	SOCKET RELAY (TIMER)
28	1	PCI	PCI	CUSTOM LEGEND PLATES (LAMACOID)
29	1	ALLEN BRADLEY	700-CPM	MASTER CONTACT CARTRIDGE
30	2	ALLEN BRADLEY	700-HN100	SOCKET RELAY (CR1,2)
31	2	ALLEN BRADLEY	700-HA32A1	GENERAL PURPOSE TUBE RELAY (CR1,2)
32	30	ALLEN BRADLEY	1492-WM4	TERMINAL BLOCK, GRAY
33	4	ALLEN BRADLEY	1492-WMG4	TERMINAL BLOCK, GREEN, GROUNDING
34	4	ALLEN BRADLEY	1492-EAJ35	END ANCHOR
35	2	ALLEN BRADLEY	1492-EBM4	END COVER
36	IN	PHOENIX	0801733	DIN RAIL, 35mm
37	10	ALLEN BRADLEY	1492-CJD6-10	JUMPER BRIDGE
38	60	ALLEN BRADLEY	1492-MS6x9 (30/card)	MARKING STRIPS
39	3	ALLEN BRADLEY	800T-P16R	AB RED PILOT LIGHTS
40				
41				
42				
43	25FT	ALPHA	1181/15C	CABLE, 15 CONDUCTOR

* (1) CONNECTOR IS JUMPERED AND CONNECTED TO UNIT, (1) EXTRA CONNECTOR IS SHIPPED LOOSE FOR REMOTE E-STOP INSTALLATION

DRAWING PKG.

ASSEMBLY DWG. B-30276 SHT'S 1 & 2 (12844-R00-S01 & S02).
HYDRAULIC SCHEMATIC DWG. B-30277 SHT. 1 (12842-R00-S01).
PARTS LIST (MECHANICAL) DWG. B-30277 SHT. 2 (12842-R00-S02).
ELECTRICAL SCHEMATIC DWG. B-30278 SHT 1 (12843-R00-S01).
PARTS LIST (ELECTRICAL) DWG. B-30278 SHT 2 (12843-R00-S02).
ELECTRICAL CONTROL BOX #1 DWG. B-30279 (12845-R00-S01).
ELECTRICAL CONTROL BOX #2 DWG. B-30280 (12846-R00-S01).

12843-R00-S02

TRIAD ITEM NO. # ESD-130-00029-06-11

THIS DRAWING IS TO BE INTERPRETED USING THE LATEST REVISION OF ANSI/ASME Y14 DRAFTING STANDARDS

UNLESS OTHERWISE SPECIFIED ALL DIMS ARE IN INCHES TOLERANCES ARE:
DECIMAL XXX ± .01
XXXX ± .005
XXXXX ± .0025
FRACTIONS ± 1/32
ANGULAR ± 1°
BREAK SHARP CORNERS

THIRD ANGLE PROJECTION

AutoCAD LT 2006

DRAWN JAS 08-05-11
CHECKED
ISSUED #
ESD113983
REV. NO.
12094-R00-S01
REV. NO.
1001464
APPROVED
QUALITY

XCITE SYSTEMS CORPORATION

SCHEMATIC, ELECTRICAL
1001P HYD. POWER SUPPLY

SIZE 1001464 | B | DWG NO. 30278 | REV 0

COMPANY XCITE SYSTEMS | SCALE NONE | SHEET 2 OF 2

CONFIDENTIAL DOCUMENT: PROPRIETARY INFORMATION NOT TO BE DISCLOSED TO OTHERS WITHOUT CONSENT OF TRIAD TECHNOLOGIES LLC. THIS DOCUMENT AND OTHER INFORMATION FROM TRIAD TECHNOLOGIES LLC. PROVIDE PRODUCT AND/OR SYSTEM OPTIONS FOR FUTURE INVESTIGATION BY USERS HAVING TECHNICAL EXPERTISE. BEFORE YOU SELECT OR USE ANY PRODUCT OR SYSTEM IT IS IMPORTANT THAT YOU ANALYZE ALL ASPECTS OF YOUR APPLICATION AND REVIEW THE INFORMATION CONCERNING THE PRODUCT OR SYSTEM IN THE CURRENT PRODUCT CATALOG. DUE TO THE VARIETY OF OPERATING CONDITIONS AND APPLICATIONS FOR THESE PRODUCTS OR SYSTEMS, THE USER, THROUGH ITS OWN ANALYSIS AND TESTING IS SOLELY RESPONSIBLE FOR MAKING THE FINAL SELECTION OF THE PRODUCTS AND SYSTEMS AND ASSURING THAT ALL PERFORMANCE, SAFETY AND WARNING REQUIREMENTS OF THE USER, THROUGH ITS OWN ANALYSIS AND TESTING IS SOLELY RESPONSIBLE FOR MAKING THE FINAL SELECTION OF THE PRODUCTS AND SYSTEMS AND ASSURING THAT ALL PERFORMANCE, SAFETY AND WARNING REQUIREMENTS OF

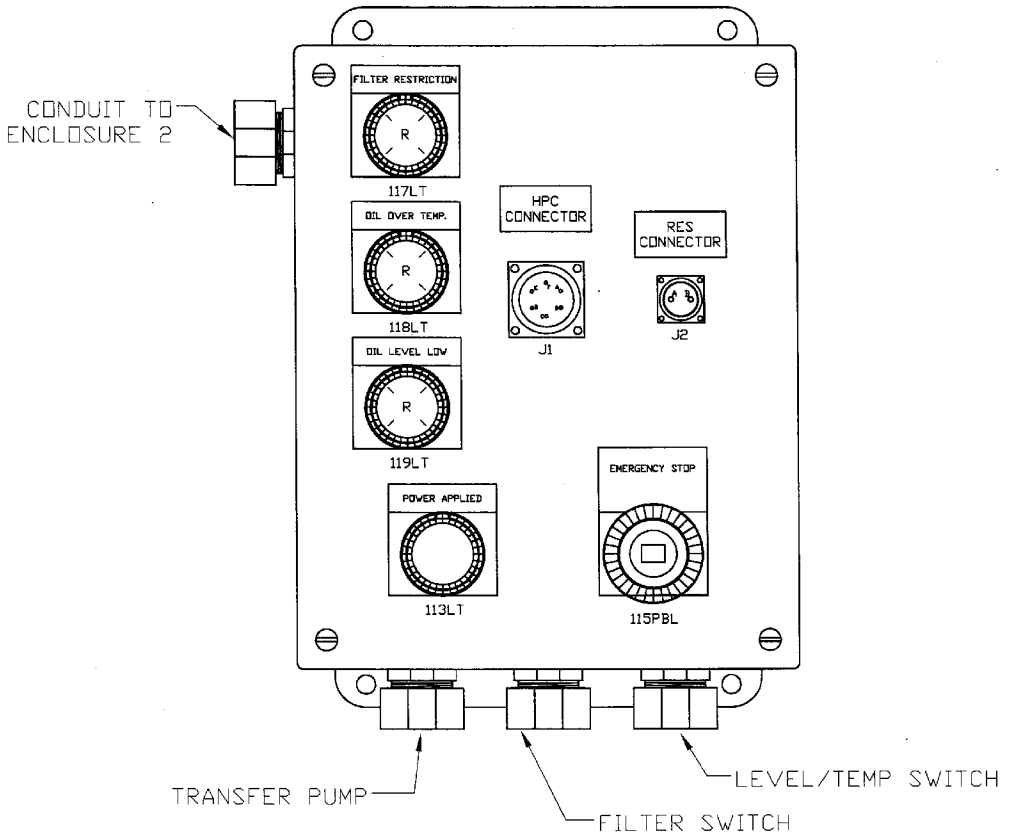

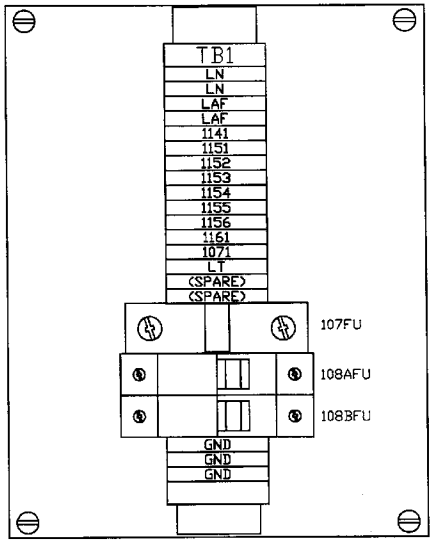

DRAWING PKG.:

ASSEMBLY DWG. B-30276 SHT'S 1& 2 (12844-R00-S01& S02).
HYDRAULIC SCHEMATIC DWG. B-30277 SHT. 1 (12842-R00-S01).
PARTS LIST (MECHANICAL) DWG. B-30277 SHT. 2 (12842-R00-S02).
ELECTRICAL SCHEMATIC DWG. B-30278 SHT 1 (12843-R00-S01).
PARTS LIST (ELECTRICAL) DWG. B-30278 SHT 2 (12843-R00-S02).
ELECTRICAL CONTROL BOX #1 DWG. B-30279 (12845-R00-S01).
ELECTRICAL CONTROL BOX #2 DWG. B-30280 (12846-R00-S01).

12845-R00-S01

TRIAD ITEM I.D. # ESD-130-00029-06-11

THIS DRAWING IS TO BE INTERPRETED USING THE LATEST REVISION OF ANSI/ASME Y14 DRAFTING STANDARDS

THIRD ANGLE PROJECTION

UNLESS OTHERWISE SPECIFIED ALL DIMS ARE IN INCHES TOLERANCES ARE:
DECIMAL 0.XX ± .01
0.XXX ± .005
0.XXXX ± .0005
FRACTIONS ± 1/32
ANGULAR ± 1°
BREAK SHARP CORNERS
AutoCAD LT 2006

DRAWN JAS DATE 06-30-11
RELEASED DATE
QUOTE # ESD113983
REF. DWG. 12159-R00-S01
REF. JOB 1001464
CUSTOMER PART #
CUSTOMER DRAW #

XCITE SYSTEMS CORPORATION

DRAWING TITLE
ELECTRICAL CONTROL BOX #1 1001P HYD. POWER SUPPLY

PRODUCTION ORDER # 1004889
SIZE B
DWG NO. 30279
REV 0
CUSTOMER XCITE SYSTEMS
SCALE NONE
SHEET 1 of 2

CONFIDENTIAL DOCUMENT: PROPRIETARY INFORMATION NOT TO BE DISCLOSED TO OTHERS WITHOUT CONSENT OF TRIAD TECHNOLOGIES LLC. THIS DOCUMENT AND OTHER INFORMATION FROM TRIAD TECHNOLOGIES LLC. PROVIDE PRODUCT AND/OR SYSTEM OPTIONS FOR FUTURE INVESTIGATION BY USERS HAVING TECHNICAL EXPERTISE. BEFORE YOU SELECT OR USE ANY PRODUCT OR SYSTEM, IT IS IMPORTANT THAT YOU ANALYZE ALL ASPECTS OF YOUR APPLICATION AND REVIEW THE INFORMATION CONCERNING THE PRODUCT OR SYSTEM IN THE CURRENT PRODUCT CATALOG. DUE TO THE VARIETY OF OPERATING CONDITIONS AND APPLICATIONS FOR THESE PRODUCTS OR SYSTEMS, THE USER, THROUGH ITS OWN ANALYSIS AND TESTING IS SOLELY RESPONSIBLE FOR MAKING THE FINAL SELECTION OF THE PRODUCTS AND SYSTEMS AND ASSURING THAT ALL PERFORMANCE, SAFETY AND WARNING REQUIREMENTS OF THE APPLICATION ARE MET.

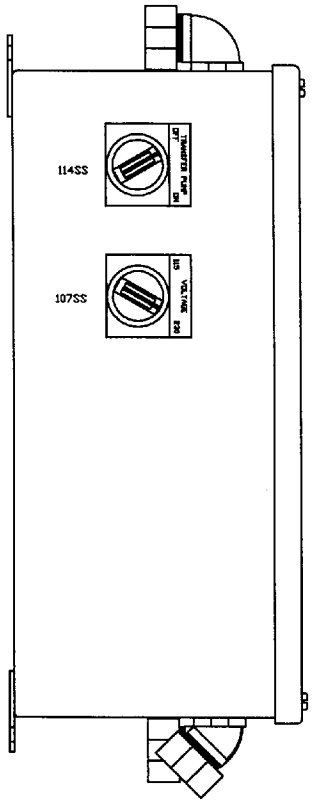

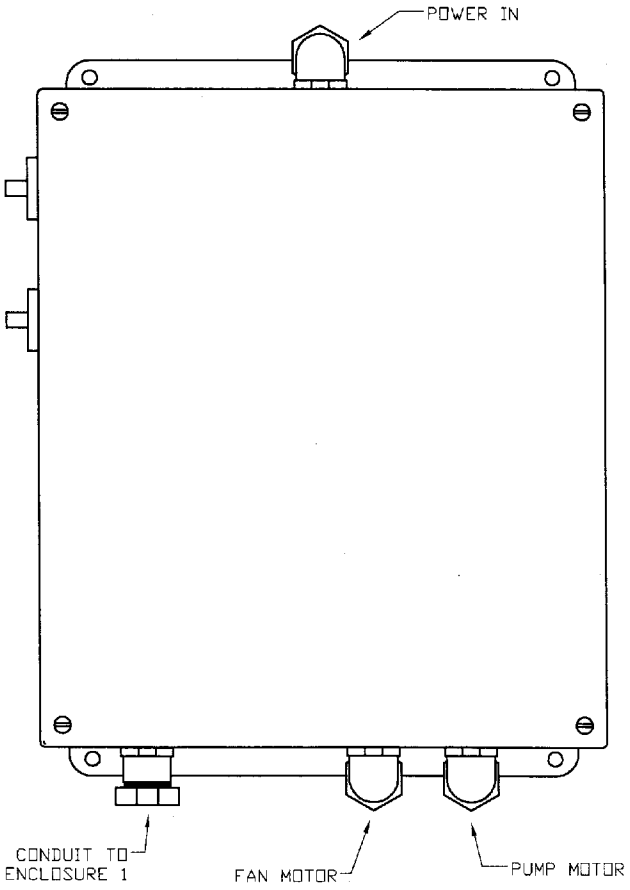

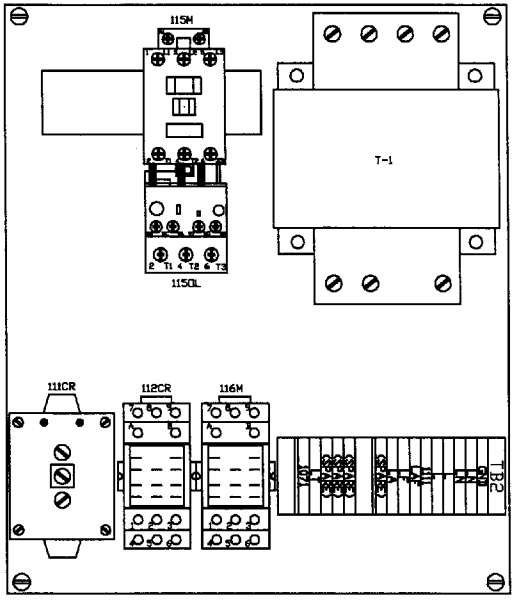

DRAWING PKG.:

ASSEMBLY DWG. B-30276 SHT'S 1 & 2 (12844-R00-S01 & S02).
HYDRAULIC SCHEMATIC DWG. B-30277 SHT. 1 (12842-R00-S01).
PARTS LIST (MECHANICAL) DWG. B-30277 SHT. 2 (12842-R00-S02).
ELECTRICAL SCHEMATIC DWG. B-30278 SHT 1 (12843-R00-S01).
PARTS LIST (ELECTRICAL) DWG. B-30278 SHT 2 (12843-R00-S02).
ELECTRICAL CONTROL BOX #1 DWG. B-30279 (12845-R00-S01).
ELECTRICAL CONTROL BOX #2 DWG. B-30280 (12846-R00-S01).

12846-R00-S01

CONFIDENTIAL DOCUMENT/ PROPRIETARY INFORMATION NOT TO BE DISCLOSED TO OTHERS WITHOUT CONSENT OF TRIAS TECHNOLOGIES LLC. THIS DOCUMENT AND OTHER INFORMATION FROM TRIAS TECHNOLOGIES LLC. PROVIDE PRODUCT AND/OR SYSTEM OPTIONS FOR FUTURE INVESTIGATION BY USERS HAVING TECHNICAL EXPERTISE. BEFORE YOU SELECT OR USE ANY PRODUCT OR SYSTEM, IT IS IMPORTANT THAT YOU ANALYZE ALL ASPECTS OF YOUR APPLICATION AND REVIEW THE INFORMATION CONCERNING THE PRODUCT OR SYSTEM IN THE CURRENT PRODUCT CATALOG. DUE TO THE VARIETY OF OPERATING CONDITIONS AND APPLICATIONS FOR THESE PRODUCTS OR SYSTEMS, THE USER, THROUGH ITS OWN ANALYSIS AND TESTING IS SOLELY RESPONSIBLE FOR MAKING THE FINAL SELECTION OF THE PRODUCTS AND SYSTEMS AND ASSURING THAT ALL PERFORMANCE, SAFETY AND WARNING REQUIREMENTS OF THE APPLICATION ARE MET.

TRIAS DRW LIB. #	ESD-130-00029-06-11	DRAWN	JAS 06-05-11
THIS DRAWING IS TO BE INTERPRETED USING THE LATEST REVISION OF ANSI/ASME Y14 DRAFTING STANDARDS	UNLESS OTHERWISE SPECIFIED ALL DIMS ARE IN INCHES TOLERANCES ARE: DECIMAL X.XX ± .01, X.XXX ± .005, X.XXXX ± .0025; FRACTIONS ± 1/32; ANGULAR ± 1°; BREAK SHARP CORNERS	CHECKED	
THIRD ANGLE PROJECTION	AutoCAD LT 2006	ENGR	
		MFG	
		QUAL	
		PART #	ESD113983
		REV. NO.	12160-R00-S01
		REF. DIM.	1001464
		MATERIAL	
		FINISH	

XCITE SYSTEMS CORPORATION

ELECTRICAL CONTROL BOX #2
1001P HYD. POWER SUPPLY

SIZE	1004889	SIZE	B
DRAWING NO.	30280	REV	0
XCITE SYSTEMS		SCALE	NONE
		SHEET	1 of 1

XCITE SYSTEMS CORPORATION

1100, 1200 and 1300 Master Controller

1. Introduction

The Xcite Master Controller is a compact electronics control package designed to provide all the controls and displays necessary to operate an Xcite exciter system. The latest concepts in electronic design, including plug-in printed circuit boards, flexible systems interface and easy-to-use operator controls, are incorporated in the unit.

The Master Controller represents the heart of the closed loop hydraulic exciter system. It enables two variables to be independently controlled simultaneously via the Static Level and Dynamic Level controls. It incorporates automatic gain control in the dynamic loop which allows a constant amplitude of the dynamic variable to be maintained even as the reference frequency of excitation is changed.

2. Theory of Operation

The major design concept used in the Xcite Master Controller is one of providing accurate feedback control of an exciter head's capability, such as force, displacement, velocity, acceleration, etc.

The Master Controller senses the feedback signals from the appropriate transducers and provides an output drive signal to the exciter head servovalve which will cause the exciter to maintain the desired levels of the static and dynamic variable as determined by the dynamic and static level controls.

2.1. Configurations

The master controller can be operated in either a single- or dual-loop configuration.

2.1.1. Single Loop

Single-loop operation is selected by placing the Frequency Range switch to the *LOW* position. This mode is generally used to control a single variable, usually force or displacement. In this *LOW FREQUENCY* mode of operation, a dynamic signal is generated by summing the reference frequency present at the *PROGRAM INPUT* with the Static Level set point signal.

2.1.2. Dual Loop

Dual-loop operation is selected by placing the *FREQUENCY RANGE* switch to the *HIGH* position. This mode applies the dynamic feedback signal to the dynamic control loop which incorporates an automatic gain control circuit. This allows a desired dynamic amplitude variable to be set and maintained over a broad frequency range and structure stiffnesses.

3. Description

The Xcite Master Controller (Model 1104, 1204 and 1304) has a variety of inputs and switch selectors which allows the various operational modes of the Exciter Head. Listed below is a description of each connector, switch and indicator located on the Master Controller.

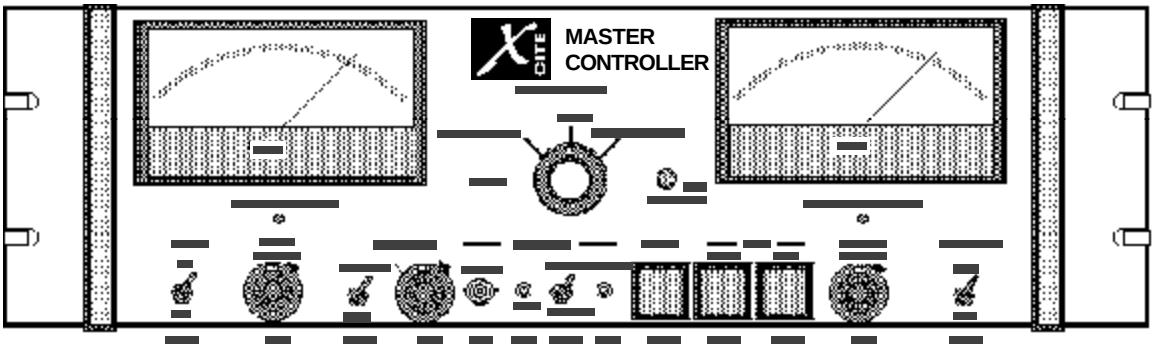

Front Panel

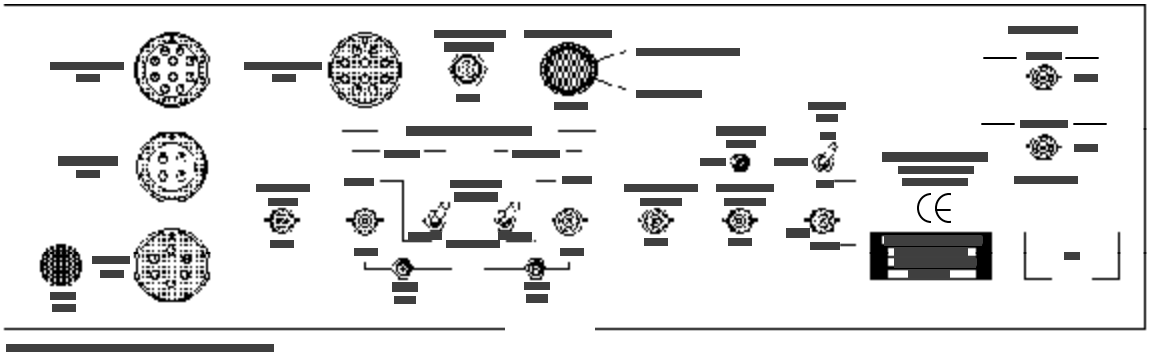

Outside Rear Panel

3.1. Front Panel *(Left and Right Top Section)*

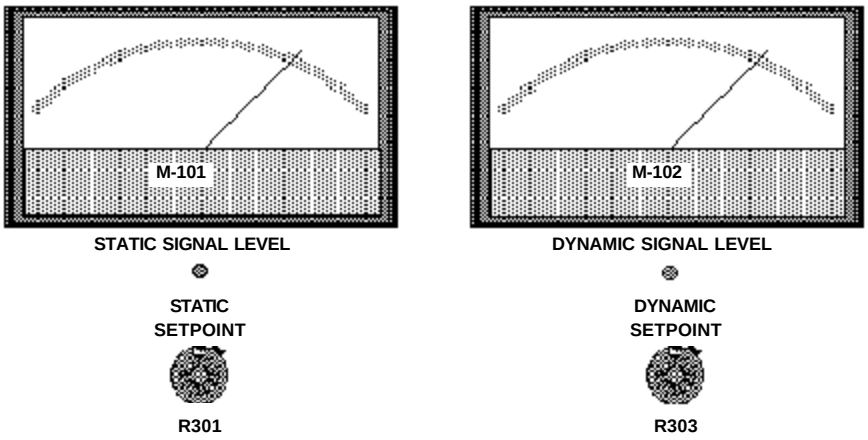

3.1.1. Static Signal Level Meter (M-101)

The Static Signal Level is displayed on this meter in Static Force Pounds or Static Displacement.

3.1.2. Static Set Point (R301)

Potentiometer used to set value of desired static variable. The Static Set Point potentiometer is calibrated in percent full scale.

3.1.3. Dynamic Signal Level Meter (M-102)

The Dynamic Signal Level is displayed on this meter in Peak Dynamic Force Pounds.

3.1.4. Dynamic Set Point (R303)

Potentiometer used to set value of desired dynamic variable. The Dynamic Set Point potentiometer is calibrated in Peak Dynamic Force Pounds.

3.1.5. Excitation Mode (SW304)

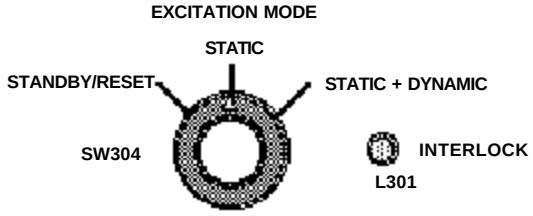

Used to select operating mode of exciter head. Turn the switch so that the arrow points to the mode of interest.

Standby/ Reset
Exciter head is at (or returns to) standby position, as preset by set-screw potentiometer on rear of Master Controller. The interlock circuits are also reset in this mode.

Static
Only the static control loop is activated.

Static + Dynamic
The static and dynamic control loops are activated.

3.1.6. Interlock (L301)

Light indicates when interlock circuits are activated, causing exciter head to return to standby position. Excitation mode control switch must be moved to Reset position to continue operation.

3.1.7. Dither - ON/ OFF (SW308)

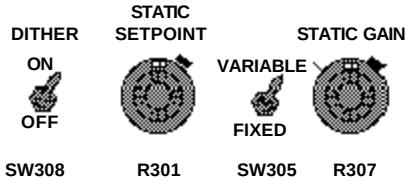

Front Panel (Left) - Bottom Section

Toggle switch which, when in *ON* position, provides 400 Hz signal to exciter servovalve. It is used primarily to overcome exciter stiction at low frequencies of operation. (Below 5 Hz)

3.1.8. Static Set Point (R301)

Indicates desired static level. Calibrated in percent full scale.
See 3.1.2.

3.1.9. Static Gain

Static Gain - Variable/ Fixed (SW305)
Toggle switch. In *VARIABLE* position actuates loop static gain potentiometer (R307).

Static Gain (R307)
Potentiometer used to set static control loop gain based on the stiffness of the structure under test. Used to eliminate control loop instabilities when using exciter in Static Displacement Mode on a weak structure.

3.1.10. Load Cell

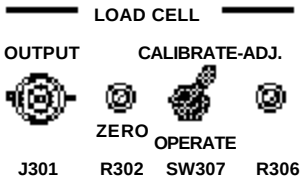

Front Panel (Middle) - Bottom Section

Output (J301)
BNC connector providing load cell output signal for monitoring of the force signal (varies from -10V to +10V depending on the actual value of the force). Duplicated on back of controller.

Zero (R302)
Set screw potentiometer used to zero the load cell output when there is no load applied.

3.1.11. Calibrate/ Operate (SW307)

Adj. (R306)
Set screw potentiometer used to adjust the master controller for the calibration value of the load cell when (SW307) is in the calibrate mode. (See load cell calibration plug for calibration value).

Operate
Select the operate mode of load cell once calibration is complete.

3.1.12. Power (SW301)

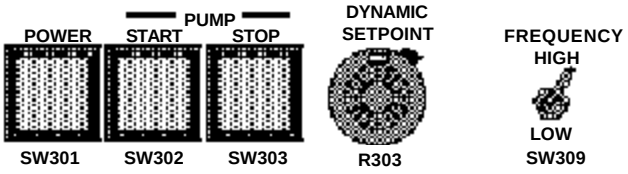

Front Panel (Right) - Bottom Section

Push switch for supplying power to master controller.

3.1.13. Pump

Start (SW302)
Push switch with internal red indicator light to energize power supply.

Stop (SW303)
Push switch to de-energize hydraulic power supply.

3.1.14. Dynamic Set Point (R303)

Indicates desired peak dynamic level. Calibrated in engineering units. **See 3.1.4.**

3.1.15. Frequency Range - HIGH/ LOW (SW309)

HIGH - Compressor control of dynamic signal at 5 Hz and above.
LOW - Single loop control of force or displacement.

3.2. Rear Panel

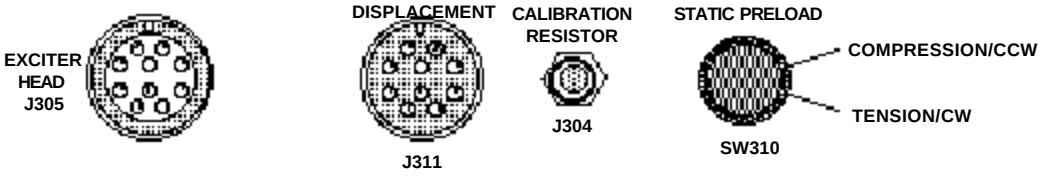

Rear Panel - Top Section

3.2.1. Exciter Head (J305)

Input connection for servovalve and load cell cable from exciter head.

3.2.2. Displacement (J311)

Input connection for displacement transducer cable from exciter head.

3.2.3. Calibration Resistor (J304)

Jack input for calibration plug provided with Load Cell Transducer.

3.2.4. Static Preload (SW310)

Dual-position switch establishes sign convention of static preload. When exciter head is operated by “pushing” on the test article, this switch should be in the *COMPRESSION* position. If exciter head is operated by “pulling” on the test structure, this switch should be in the *TENSION* position.

3.2.5. Interlock (J306)

Input connect for interlock function. If external control of this function is not desired, an Xcite supplied mating connector with pins C and D shorted must be used. If user supplied external control is desired, then appropriate contact closure between pins C and D must be supplied. Pins A and B are supplied for interlock of additional external equipment, as required.

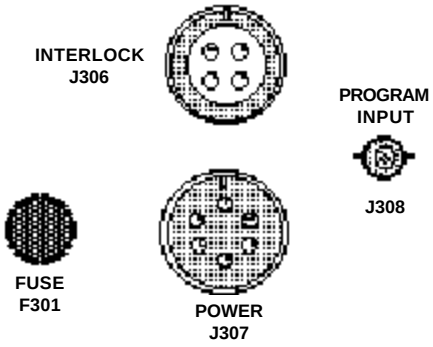

Rear Panel (Left) - Bottom Section

3.2.6. Power (J307)

Input connection for cable from hydraulic power supply. When a non-Xcite hydraulic power supply is used, this is the input connection for the direct 110V AC power cord.

3.2.7. Fuse (F301)

Use 3 amp fuse for 115 VAC. Use 1.5 amp fuse for 230 VAC.

3.2.8. Program Input (J308)

Input connection for signal from reference oscillator.

A 1 volt RMS signal must be provided to ensure system control calibration.

3.2.9. Controlled Variable - Static

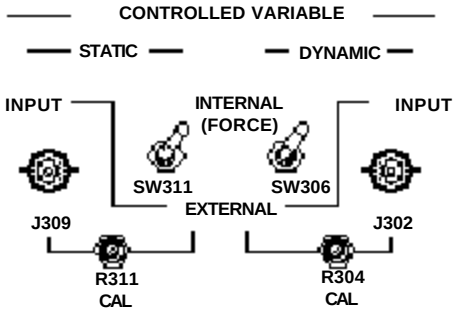

Rear Panel (Middle) - Bottom Section

Input (J309)
Input BNC connection for externally supplied user-specified static feedback variable. Input signal level should be 5 volts minimum full scale. Also used for Displacement Transducer feedback from the Exciter Head.

Internal/ External (SW311)
Toggle switch to select as the static controlled variable either the internally available load cell transducer signal or an externally supplied user-specified static feedback signal.

Cal. (R311)
Set screw potentiometer used to scale externally supplied static feedback variable to 5 volts full scale. Factory set for scaling 10 volts to 5 volts.

3.2.10. Controlled Variable - Dynamic

Input (J302)
BNC connection for externally supplied user-specified dynamic feedback variable. Input signal level should be 5 volts peak (minimum) full scale.

Internal/ External (SW306)
Toggle switch to select as the dynamic controlled variable either the internally available load cell transducer signal or an externally supplied user-specified dynamic feedback signal such as acceleration.

Cal. (R304)
Set screw potentiometer used to scale down externally supplied dynamic feedback variable to 5 volts peak full scale.

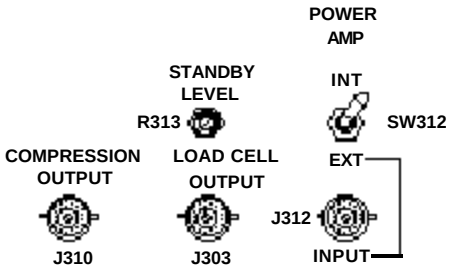

Rear Panel (Left) - Bottom Section

3.2.11. Compression Output (J310)

BNC connection providing an output signal which is proportional to dynamic forward control signal (servovalve drive signal) after multiplication by reference oscillator signal.

3.2.12. Standby Level (R313)

Set screw potentiometer determining static level when Master Controller is in standby or interlock mode.

3.2.13. Load Cell Output (J303)

BNC connector providing load cell output signal for monitoring of the force signal (+/- 10V max). Duplicated on front of controller.

3.2.14. Power Amp - INT/ EXT (SW312)

Toggle switch to select input signal to power amplifier. *INTERNAL* position is used for normal operation and provides dynamic control signal proportional to level requested on the front of the Master Controller at the reference oscillator frequency. *EXTERNAL* position is used for external dynamic control applications such as random or shaped random signals from an FFT Analyzer or random noise generator. In *EXTERNAL* position, the *DYNAMIC SET POINT (R303)* potentiometer on the front panel attenuates the external dynamic control signal and the *DYNAMIC SIGNAL LEVEL METER (M-102)* indicates 1.41 times the true RMS voltage of the dynamic variable feedback level.

3.2.15. Power Amp - INPUT (J312)

BNC connector used to supply external control signal source with *POWER AMP* toggle switch on *EXTERNA*L. Use only J308 *PROGRAM INPUT* with toggle switch on *INTERNAL*.

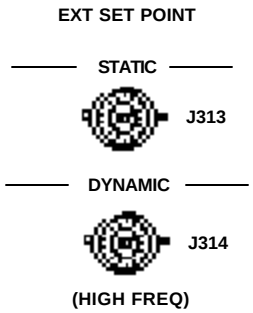

Rear Panel (Right) - Top Section

3.2.16. EXT Set Point - Static (J313)

Allows computer control of the Static Set Point by inputing a voltage from a DAC (Digital to Analog Convertor). Typically this function is used when it is desired to have an automatic test sequence from a computer controlled FFT Analyzer.

CAUTION: *This input is ALWAYS live and will activate the static control loop whenever a DAC voltage is present.*

The EXT Static Set Point has the following characteristics:

- It is ***ALWAYS*** operable in the Standby, Static and Static + Dynamic modes.

- The input voltage from the DAC should be 0 to +5VDC, +/-5% to achieve full scale control of the Static Controlled Variable.

  Note: Always use a positive DC DAC voltage for this function.

- The input voltage from the DAC will add to the Static Set Point. (ie - If the Static Set Point Dial is set to 5.0 (1/2 of full stroke in displacement mode) then the EXT DAC voltage input will add to the Set Point on the Set Point Dial.

3.2.17. EXT Set Point - Dynamic (J314)

Allows computer control of the Dynamic Set Point by inputing a voltage (NOT frequency) from a DAC (Digital to Analog Convertor). Typically this function is used when it is desired to have an automatic test sequence from a computer controlled FFT Analyzer.

CAUTION: *This input is live when the Mode Control Switch is in the Static + Dynamic Mode. Dynamic Force output will occur whenever a DAC voltage is present at this input.*

The EXT Dynamic Set Point has the following characteristics:

- It operates in the Static + Dynamic Mode.
- It only operates in the High Frequency Range

  Note: Never use in the Low Frequency Range Mode

- The input voltage from the DAC should be 0 to -5VDC, +/-5% to achieve full scale control of the Dynamic Controlled Variable.

  Note: Always use a negative DC DAC voltage for this function.

- The input voltage from the DAC will add to the Dynamic Set Point. (ie - If the Dynamic Set Point Dial is set to 5.0, then the EXT DAC voltage input will add to the Set Point value. In this example a DAC voltage of -2.5V will make the Set Point 100%).

4. Operation

4.1. Concept of Operation

The Xcite Master Controller is designed so that the variables to be controlled can be readily selected by the positions of the Controlled Variable switches located on the rear panel of the controller.

When the Controlled Variable switches are in the Internal position, the controlled variable will be force. The force feedback signal is internally routed to the static and dynamic control loops. The composite force signal is separated by a low-pass and high-pass filter, with the DC and AC levels of the composite signal being displayed by the Static and Dynamic meters, respectively.

If a variable(s) other than force is to be controlled, the Controlled Variable switches can be placed in the External position and feedback from the variable to be controlled can be applied to the External Static and/ or External Dynamic inputs. This allows alternate variables such as displacement to be statically and dynamically controlled, or two variables such as static displacement and dynamic force to be controlled.

4.2. System Interconnection

Mount the exciter head to be operated securely in its test configuration and connect the hydraulic pump hoses to the exciter.

4.2.1. Exciter head cable (J305 to servovalve and load cell)

4.2.2. Displacement kit cable (J311 to exciter displacement kit)

4.2.3. Power cord or pump cable (J307 to J501 or 110 VAC)

4.2.4. Reference oscillator to Program input J308 (1 V RMS +/- 50 MV)

4.2.5. Connect an oscilloscope and/ or D.V.M. to Load Cell outputs J301 or J303.

4.3. Operation - Force Control

To operate the exciter under force control, place the following switches and controls in the positions given.

4.3.1. Set Controls

MODE CONTROL	STANDBY/RESET
DITHER	OFF
LOOP GAIN	FIXED (If test specimen static stiffness is less than 10,000 lbs/inch, place in variable & set variable gain control at 5.00)
FREQUENCY RANGE	HIGH
STATIC SET POINT	0
DYNAMIC SET POINT	0
STATIC CONTROLLED VARIABLE	INTERNAL
DYNAMIC CONTROLLED VARIABLE	INTERNAL
TENSION/ COMPRESSION	COMPRESSION

4.3.2. Depress the Power switch

The controller will energize and a momentary deflection of the meter pointers may occur.

4.3.3. Adjust Load Cell

- Adjust the load cell zero adjust for 0 Volts on a digital volt meter. Refer to the Calibration plug located on the rear of the controller for the load cell calibrate value and the output sensitivity of the controller.

- Place the load cell calibrate switch in the calibrate position. If necessary, adjust the load cell calibrate screw until the voltage measured by the digital volt meter equals the calibration volt age. The calibration voltage equals the calibration value divided by the output sensitivity.

  Example:
  Cal. Value = 742 lbs
  Output Sens. = 250 lbs/ v
  therefore: 742/250 = 2.968v at J301/ J303

- Return the load cell calibrate switch to the operate position.

4.3.4. Depress Pump Start Button

The Hydraulic Power Supply should energize.

- Set the Mode Control switch to the Static position.

- Slowly turn the Static Set Point clockwise until the required static force is obtained, as indicated on the Static Meter. If operating into a “weak” structure, static force instability may occur. If this should happen, adjust the Variable loop gain counterclockwise until static stability is achieved.

- Set the reference oscillator to the desired excitation frequency.

- Set the Mode Control switch to Static + Dynamic position.

- Turn the Dynamic Set Point clockwise until the desired dynamic force is obtained.

Note: Refer to the Exciter Head specifications for maximum peak force versus frequency.

- If swept sine test are to be run, the sweep rate of the oscillator will have to be adjusted so that the dynamic level does not decrease as the frequency is swept upward. If this occurs, lower the sweep rate until the dynamic level is maintained as the oscillator frequency is swept.

4.4. Operation - Displacement Control

If the exciter head is to be operated under displacement control, place the controller switches in the following positions.

4.4.1. Set Controls

MODE CONTROL	STANDBY/RESET
DITHER	OFF
LOOP GAIN	VARIABLE (Variable loop gain control at 5.00)
FREQUENCY RANGE	LOW
STATIC LEVEL	0
DYNAMIC LEVEL	0
STATIC CONTROLLED VARIABLE	EXTERNAL
DYNAMIC CONTROLLED VARIABLE	INTERNAL
TENSION/ COMPRESSION	COMPRESSION

- Energize the controller and the hydraulic power supply.
- Switch the Mode Control to the Static position.
- Turn the Static Set Point potentiometer until the desired static position is reached. The static position can be read on the Static Meter in percent of full stroke. For instance, if the exciter head being used has a 1 inch stroke and the Static meter reads 40%, then the exciter piston is extended 40% of one inch or .4 inch.

The exciter piston position can be dynamically varied by turning the Mode Control switch to the Static + Dynamic position and adjusting the Dynamic Level control for the desired stroke. The Dynamic meter will not indicate the peak displacement in this mode of operation. It will be necessary to monitor the displacement signal at the External Static Variable input jack J309. The input signal at this point will be 0 - 10 VDC. If the exciter has a 1 inch stroke, then full stroke will be equal to 10 VDC. On torsional exciters, 10 VDC represents 100 degrees of rotation.

If compressor control is desired, the Frequency Range should be set to the High position and the displacement input also connected to the Dynamic External Static input J302. At frequencies below approximately 5 Hz full stroke of the exciter may not be obtained inthe High Frequency mode. However, the amplitude of the 1 V RMS signal from the reference oscillator may be increased to obtain a slightly larger dynamic stroke.

4.5. Operation - External Variable

Operation using the External Static and Dynamic controlled variable inputs is very similar to the operation using the internal controlled variable. One requirement, however, is that the external variables be scaled to the full scale value of the Static and Dynamic meters. This is accomplished by adjusting the External Cal. potentiometers. A 5 VDC signal is required for full scale deflection of the Static meter and a 5 V peak signal is required for full scale deflection of the Dynamic meter. The Static External Cal. potentiometer is factory adjusted for 10 VDC full scale static signal. The Dynamic Cal. potentiometer is adjusted for a 5 V peak dynamic signal. If signals larger than these are to be used, the Cal. potentiometer should be readjusted so that those signals will cause full scale deflection of the meters.

4.6. Computer Control - External Set Points (Static and Dynamic)

As explained in Section 3.2.16. and Section 3.2.17., it is possible to have a computer controlled FFT Analyzer control the Static and Dynamic Set Points of the Master Controller. Separate DAC output voltages are required for the Static Set Point and Dynamic Set Points. The Static DAC output must be a positive voltage and the Dynamic DAC output must be a negative voltage.

When using an external computer to input the Static and Dynamic Set Points, attention must be paid to the consequences of inputing a DAC voltage when the Hydraulic Power Supply is turned on. The Exciter Head will attempt to operate when these signals are present even with the Mode Control Switch in Standby. **STRUCTURE DAMAGE OR PERSONAL INJURY CAN OCCUR IF THE TEST SEQUENCE IS NOT THOROUGHLY PLANNED.**

5. Theory of Operation

The Xcite Master Controller consists of seven major circuits. They are:

- Static control circuitry
- Dynamic control circuitry
- Power amplifier
- Load cell amplifier
- Displacement transducer buffer/ amplifier
- Interlock circuitry
- Pump/ start/ stop

Each section is described in detail as follows.

5.1. Circuit Descriptions

Refer to the Master Controller block diagram and to the appropriate printed circuit board schematics for the following circuit descriptions.

5.1.1. VR101 (Voltage Regulator)

Provides the excitation voltage for the load cell. The regulated voltage is determined by the values of R169 and R170.

$$V_{out} = \frac{1.25V(1 + R170)}{R169}$$

To calibrate the load cell, place a precision shunt resistance (Cal. Plug provided with each load cell) into J304 and place the load cell calibrate/ operate switch SW307 in the calibrate position. This causes an imbalance of the load cell bridge and results in an output of the load cell amplifier A109. The excitation voltage to the load cell is then varied by adjusting R306 until the output of A109 corresponds to the calibration value of the load cell, as given on the calibration plug.

5.1.2. SW310 (Preload Switch)

Allows the outputs of the load cell to be reversed before being applied to A109. This will cause the exciter head to operate in a tension mode, instead of a compression mode.

5.1.3. A109 (Amplifier)

A109 is a precision differential instrumentation amplifier used to amplify the differential voltages from the load cell bridge. R166 and A108 allow the output of A109 to be scaled to a convenient engineering unit for monitoring purposes. The output of A108 is available at BNC jacks on the front and rear of the Master Controller.

The output of A109 is also applied to SW311 and SW306. When these switches are in the *INTERNAL* position, the force signal is applied to the static and dynamic loops as the feedback signal and controlled variable.

5.1.4. A104 and A105 (Static Control Loop)

The static control loop consists of A105 and A104. A105 is a dual op-amp. A105B is a low-pass filter which allows the static portion of the feedback signal to be indicated by the static meter. A105A is an inverter/ buffer stage. R137 allows calibration of the dynamic level control when operating in the *LOW FREQUENCY* force control. R135 allows calibration in the *LOW FREQUENCY* displacement control.

The feedback signal from A105A is summed with the static level signal at the summing junction of A104. A104 is a low-pass filter which provides high DC gain which rolls off at 6DB/ octave at a breakpoint determined by R174 and C108. R176, R102 and R113 determine the DC gain of A104. The output of A104 is applied through SW311 and / or K201 and to the appropriate feedback path as determined by the controlled variable.

The output of A104 is also applied to R133 and enables the static loop gain to be adjusted for optimum operation of the exciter head under force control. Further operator adjustment of the static loop gain is provided by R307 when the *GAIN* switch SW305 is in the *VARIABLE* position.

5.1.5. A401 and A402 (Dynamic Loop)

The dynamic loop has two main circuits. One circuit, consisting of A401 and A402, demodulates the incoming reference frequency and converts it to a DC reference signal which is applied to the Dynamic Level Control, R303.

The dynamic demodulator circuit consist of a low-pass filter A103, and a true RMS-to-DC converter, U102. The DC portion of the force signal is blocked by C109. The output of U102 is a DC signal. This DC is summed with the dynamic set point signal from the wiper of R303. The resultant error signal is integrated by A012 and C104. This DC error signal is applied to one input of the four-quadrant multiplier, U101. The reference frequency supplied by the reference oscillator is supplied to the other input of U101. The output of U101 is a signal with

a frequency identical to the reference frequency and with an amplitude equal to the product of the two input signals. A101A converts the current output of U101 to a voltage. A101B provides output offset capabilities. C101 and C102 allow the dynamic signal to have two breakpoints at higher frequencies, as required to prevent the servovalve drive signal from clipping.

The output of U101 and A104 are applied to summing amplifier A201. The dither signal is also summed at this point if it is selected by the dither switch. The output of A202 is a composite error signal which is then applied to the power amplifier.

The power amplifier is a voltage-to-current converter circuit. The output current will remain constant for a given input voltage, even though the load impedance (servovalve coils) changes.

5.1.6. A107 (Inverter Buffer)

This circuit allows the displacement transducer to be offset and scaled to convenient engineering units. The scaled displacement signal is fed out through J311/ G into a BNC cable which is then connected to J309. By placing the Static controlled variable switch in the External position, displacement will become the static controlled variable.

5.1.7. A106 and U103 (Peak Detector Circuit)

A106 and U103 form a peak detector circuit which can be adjusted if an absolute value of displacement is exceeded. It is primarily used with inertial mass exciter heads, and only appears in Master Controllers with the MOD2 option.

The interlock circuitry provides a means of insuring that the systems always power up to a preset level, determined by Standby level pot. If power is applied to the Master Controller with the Mode Control switch in either the Static or Static + Dynamic position, the system will interlock. The Mode Control switch must then be placed in the Standby/ Reset position. The Hydraulic Power Supply must also be energized before proceeding to the desired mode of operation.

6. Specifications

Modes:

• Standby/ Reset	Continuously variable standby level
• Static	Continuously variable static level
• Static + Dynamic	Continuously variable static level and dynamic level
• External Static Input	10 K ohms input impedance Positive polarity 0 - 10V
• External Dynamic Input	10 K ohms input impedance 10 V peak AC
• Dither	400 Hz +/- 10%
• Control Accuracy	40 dB of full scale controlled variable
• Program Input Reference Signal	1.0 VAC RMS +/- 50 MV - sinusoidal 5.0 V peak maximum - random
• Power Amp Input Reference Signal	0 to 5 Volt Peak
• EXT Static Set Point	0 to +5VDC for full scale operation
• EXT Dynamic Set Point	0 to -5VDC for full scale operation

7. Drawings

Printed Circuit Board Location	———
Controller Schematic	D-015393
Block Diagram Master Controller (2 sheets)	D-015391
Schematic PCB 110-01 Sheet 3 - Load Cell Amp & Peak-Detector	C-015358
Schematic PCB 110-01 Sheet 1 - Static Loop	C-015358
Schematic PCB 110-01 Sheet 2 - Dynamic Loop	C-015358
PCB 110-01 (Component Location)	D-015384
Schematic PCB 110-02	C-014893
Assy PCB 110-02 (Component Location)	C-014881
Schematic PCB 110-04	C-010660
Assy PCB 110-04 (Component Location)	C-014882

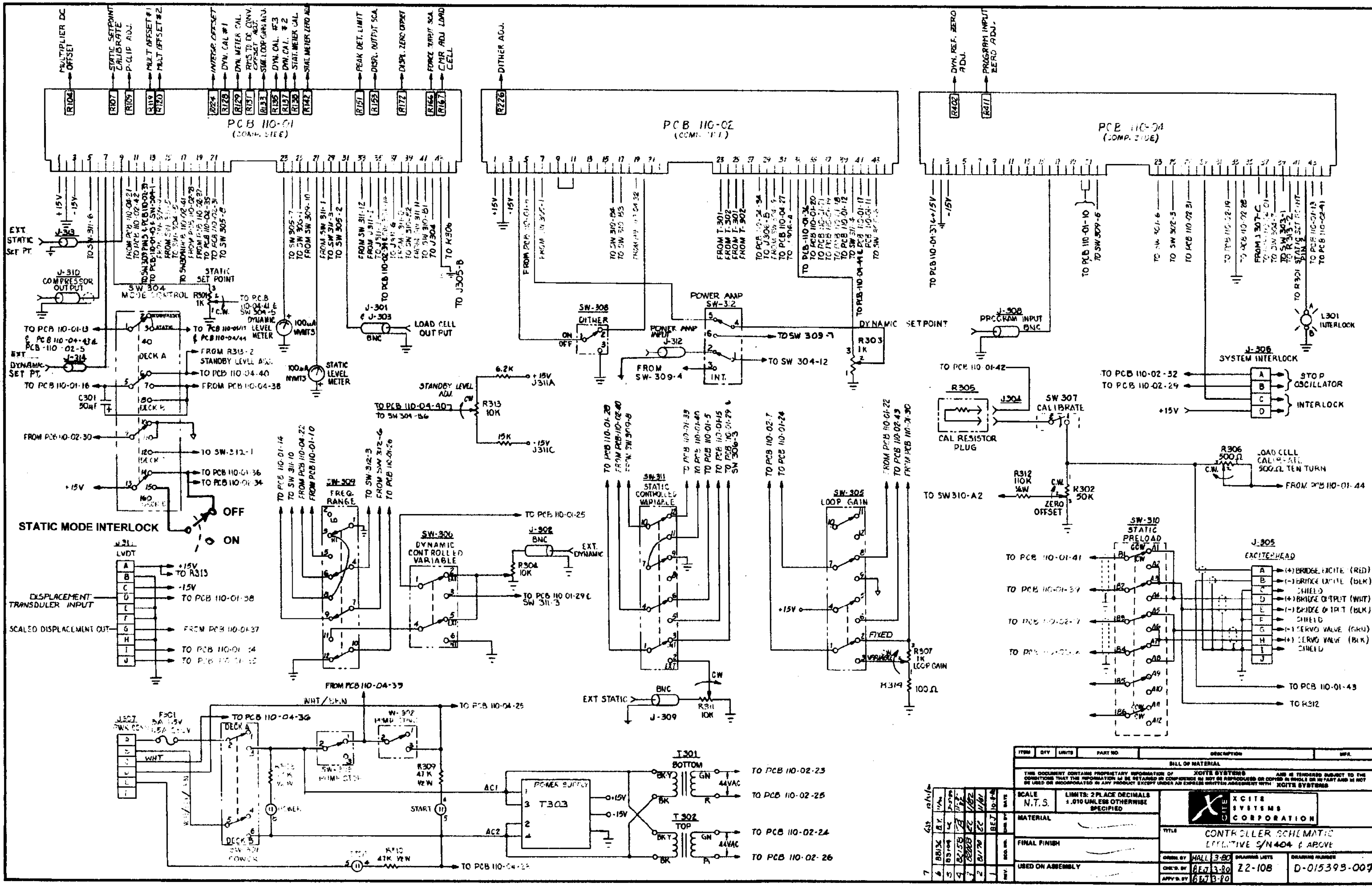
PCB 110-01 (COMP. SIDE)
PCB 110-02 (COMP. SIDE)
PCB 110-04 (COMP. SIDE)
MULTIPLIER DC OFFSET
STATIC SETPOINT CALIBRATE
P-CLIP ADJ.
MULT OFFSET #1
MULT OFFSET #2
INTEGR. OFFSET
DYN. CAL #1
DYN. METER CAL.
RMS TO DC CONV. OFFSET ADJ.
STAT. LOOP GAIN ADJ.
DYN. CAL. #3
DYN. CAL. #2
STAT. METER CAL.
STAT. METER ZERO ADJ.
PEAK DET. LIMIT
DISPL. OUTPUT SCA.
DISPL. ZERO OFFSET
FORCE INPUT SCA.
CMR ADJ LOAD CELL
DITHER ADJ.
DYN. REF. ZERO ADJ.
PROGRAM INPUT ZERO ADJ.
EXT STATIC SET PT.
J-310 COMPRESSOR OUTPUT
SW 304 MODE CONTROL
STATIC SET POINT
R301 1K
DYNAMIC LEVEL METER
STATIC LEVEL METER
J-301 & J-303 BNC
LOAD CELL OUT PUT
EXT DYNAMIC SET PT.
C301 50µF
DECK A
DECK B
STATIC MODE INTERLOCK
OFF
ON
J-311 LVDT
DISPLACEMENT TRANSDULER INPUT
SCALED DISPLACEMENT OUT
SW-308 DITHER
POWER AMP SW-312
POWER AMP INPUT J-312
FROM SW-309-4
TO SW 309-7
TO SW 304-12
DYNAMIC SETPOINT
R303 1K
STANDBY LEVEL ADJ.
R313 10K
6.2K
15K
+15V J311A
-15V J311C
SW-309 FREQ. RANGE
SW-306 DYNAMIC CONTROLLED VARIABLE
J-302 BNC
EXT. DYNAMIC
R304 10K
SW-311 STATIC CONTROLLED VARIABLE
EXT STATIC
J-309 BNC
R311 10K
SW-305 LOOP GAIN
FIXED
VARIABLE
R307 1K LOOP GAIN
R319 100Ω
J-308 PROGRAM INPUT BNC
R305 CAL RESISTOR PLUG
J304
SW 307 CALIBRATE
R312 110K ¼W
R302 50K ZERO OFFSET
TO SW310-A2
R306 500Ω
LOAD CELL CALIBRATE 500Ω TEN TURN
J-306 SYSTEM INTERLOCK
STOP OSCILLATOR
INTERLOCK
L301 INTERLOCK
SW-310 STATIC PRELOAD
J-305 EXCITER HEAD
(+) BRIDGE EXCITE (RED)
(-) BRIDGE EXCITE (BLK)
SHIELD
(+) BRIDGE OUTPUT (WHT)
(-) BRIDGE OUTPUT (BLK)
SHIELD
(-) SERVO VALVE (GRN)
(+) SERVO VALVE (BLK)
SHIELD
TO PCB 110-01-43
TO R312
J-307 PWR CONN
F301 5A 115V
WHT
WHT/BRN
SW-301 POWER
SW-302 PUMP START
POWER
START
R309 47K ½W
R310 47K ½W
AC1
AC2
POWER SUPPLY T303
+15V
-15V
T301 BOTTOM
T302 TOP
44VAC
TO PCB 110-02-23
TO PCB 110-02-25
TO PCB 110-02-24
TO PCB 110-02-26
ITEM QTY UNITS PART NO. DESCRIPTION MFR.
BILL OF MATERIAL
THIS DOCUMENT CONTAINS PROPRIETARY INFORMATION OF XCITE SYSTEMS AND IS TENDERED SUBJECT TO THE CONDITIONS THAT THE INFORMATION (a) BE RETAINED IN CONFIDENCE (b) NOT BE REPRODUCED OR COPIED IN WHOLE OR IN PART AND (c) NOT BE USED OR INCORPORATED IN ANY PRODUCT EXCEPT UNDER AN EXPRESS WRITTEN AGREEMENT WITH XCITE SYSTEMS
SCALE N.T.S.
LIMITS: 2 PLACE DECIMALS ±.010 UNLESS OTHERWISE SPECIFIED
MATERIAL
FINAL FINISH
USED ON ASSEMBLY
XCITE SYSTEMS CORPORATION
TITLE CONTROLLER SCHEMATIC EFFECTIVE S/N 404 & ABOVE
ORIG. BY HALL 3-80
CHK'D. BY BEJ 3-80
APPV'D. BY BEJ 3-80
22-108
D-015393-007

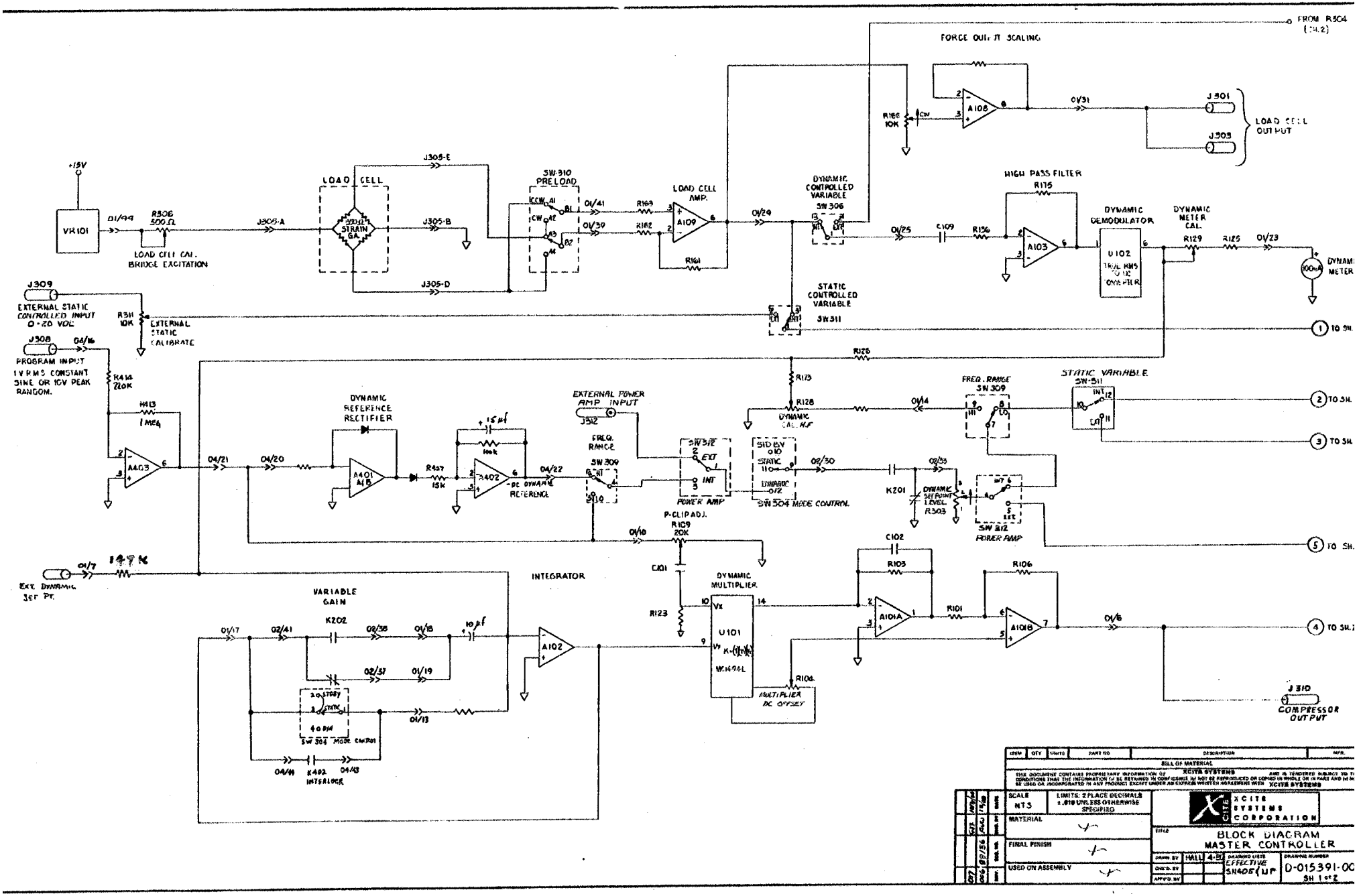

ITEM	QTY	UNITS	PART NO	DESCRIPTION	MFR.

BILL OF MATERIAL

THIS DOCUMENT CONTAINS PROPRIETARY INFORMATION OF XCITE SYSTEMS AND IS TENDERED SUBJECT TO THE CONDITIONS THAT THE INFORMATION IT IS TO BE RETAINED IN CONFIDENCE IS NOT BE REPRODUCED OR COPIED IN WHOLE OR IN PART AND IT MAY BE USED OR INCORPORATED IN ANY PRODUCT EXCEPT UNDER AN EXPRESS WRITTEN AGREEMENT WITH XCITE SYSTEMS

07	06	8P/56	SDS	
			PAU	

SCALE NTS

LIMITS: 2 PLACE DECIMALS ±.010 UNLESS OTHERWISE SPECIFIED

MATERIAL —

FINAL FINISH —

USED ON ASSEMBLY —

XCITE SYSTEMS CORPORATION

TITLE: BLOCK DIAGRAM MASTER CONTROLLER

DRAWN BY	HALL	4-81	DRAWING USED EFFECTIVE SN405 & UP
CHK'D BY			
APPV'D BY			

DRAWING NUMBER D-015391-00 SH 1 of 2

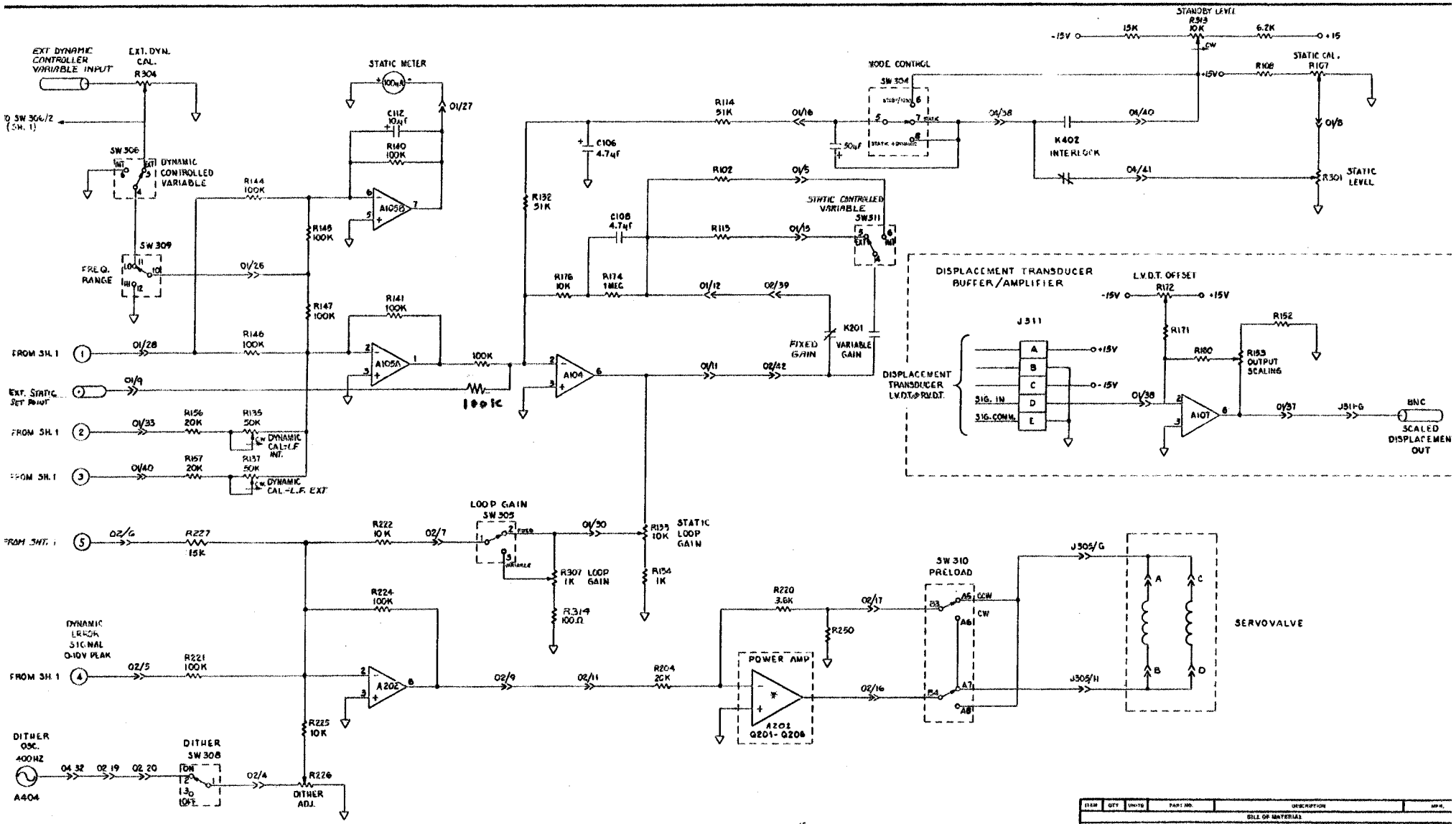
EXT DYNAMIC CONTROLLER VARIABLE INPUT
EXT. DYN. CAL. R304
TO SW 306/2 (SH. 1)
SW 306
DYNAMIC CONTROLLED VARIABLE
STATIC METER
C112 10μF
R140 100K
01/27
A105B
R144 100K
R148 100K
SW 309
FREQ. RANGE
01/26
R147 100K
R141 100K
A105A
FROM SH. 1
01/28
R146 100K
EXT. STATIC SET POINT
01/9
R156 20K
R135 50K
DYNAMIC CAL-L.F. INT.
01/33
R157 20K
R137 50K
DYNAMIC CAL-L.F. EXT
01/40
100K
100K
C106 4.7μF
R114 51K
01/16
MODE CONTROL
SW 304
50μF
01/38
K402 INTERLOCK
01/40
01/41
STANDBY LEVEL R313
-15V
15K
10K
6.2K
+15
CW
+15V
R108
STATIC CAL. R107
01/8
R301 STATIC LEVEL
R132 51K
R102
01/5
STATIC CONTROLLED VARIABLE
SW311
C108 4.7μF
R115
01/15
R178 10K
R174 1MEG
01/12
02/39
K201 VARIABLE GAIN
FIXED GAIN
A104
01/11
02/42
DISPLACEMENT TRANSDUCER BUFFER/AMPLIFIER
L.V.D.T. OFFSET
R172
-15V
+15V
J311
A
B
C
D
E
+15V
-15V
SIG. IN
SIG. COMM.
DISPLACEMENT TRANSDUCER L.V.D.T. or R.V.D.T.
R171
R180
R152
R153 OUTPUT SCALING
01/38
A107
01/37
J311-G
BNC
SCALED DISPLACEMENT OUT
FROM SH. 1
02/6
R227 15K
R222 10K
02/7
LOOP GAIN SW 305
01/30
R133 10K
STATIC LOOP GAIN
R307 LOOP GAIN 1K
R154 1K
R314 100Ω
R224 100K
DYNAMIC ERROR SIGNAL 0-10V PEAK
FROM SH. 1
02/5
R221 100K
A202
02/9
02/11
R204 20K
R220 3.6K
02/17
R250
POWER AMP
A201 Q201-Q206
02/16
SW 310 PRELOAD
A5
A6
A7
A8
CCW
CW
J305/G
J305/H
SERVOVALVE
A
B
C
D
R225 10K
DITHER OSC. 400HZ
A404
04/32
02/19
02/20
DITHER SW 308
ON
OFF
02/4
R226
DITHER ADJ.
* K = 18/250 (MA OUT/V IN)
ITEM
QTY
UNITS
PART NO.
DESCRIPTION
MFR.
BILL OF MATERIALS
THIS DOCUMENT CONTAINS PROPRIETARY INFORMATION OF XCITE SYSTEMS ... AND IS TENDERED SUBJECT TO THE CONDITIONS THAT THIS INFORMATION IS NOT TO BE DISCLOSED IN WHOLE OR IN PART AND IS NOT TO BE USED OR INCORPORATED IN ANY PRODUCT EXCEPT UNDER AN EXPRESS WRITTEN AGREEMENT WITH XCITE SYSTEMS
SCALE NTS
LIMITS: 2 PLACE DECIMALS ±.010 UNLESS OTHERWISE SPECIFIED
MATERIAL
FINAL FINISH
USED ON ASSEMBLY
XCITE SYSTEMS CORPORATION
TITLE
BLOCK DIAGRAM MASTER CONTROLLER
DRWN. BY MALL 4-80
CHK'D. BY
APVD. BY
DRAWING LISTS
DRAWING NUMBER
D-015391-00
SH 2 of 2

C-15358-00

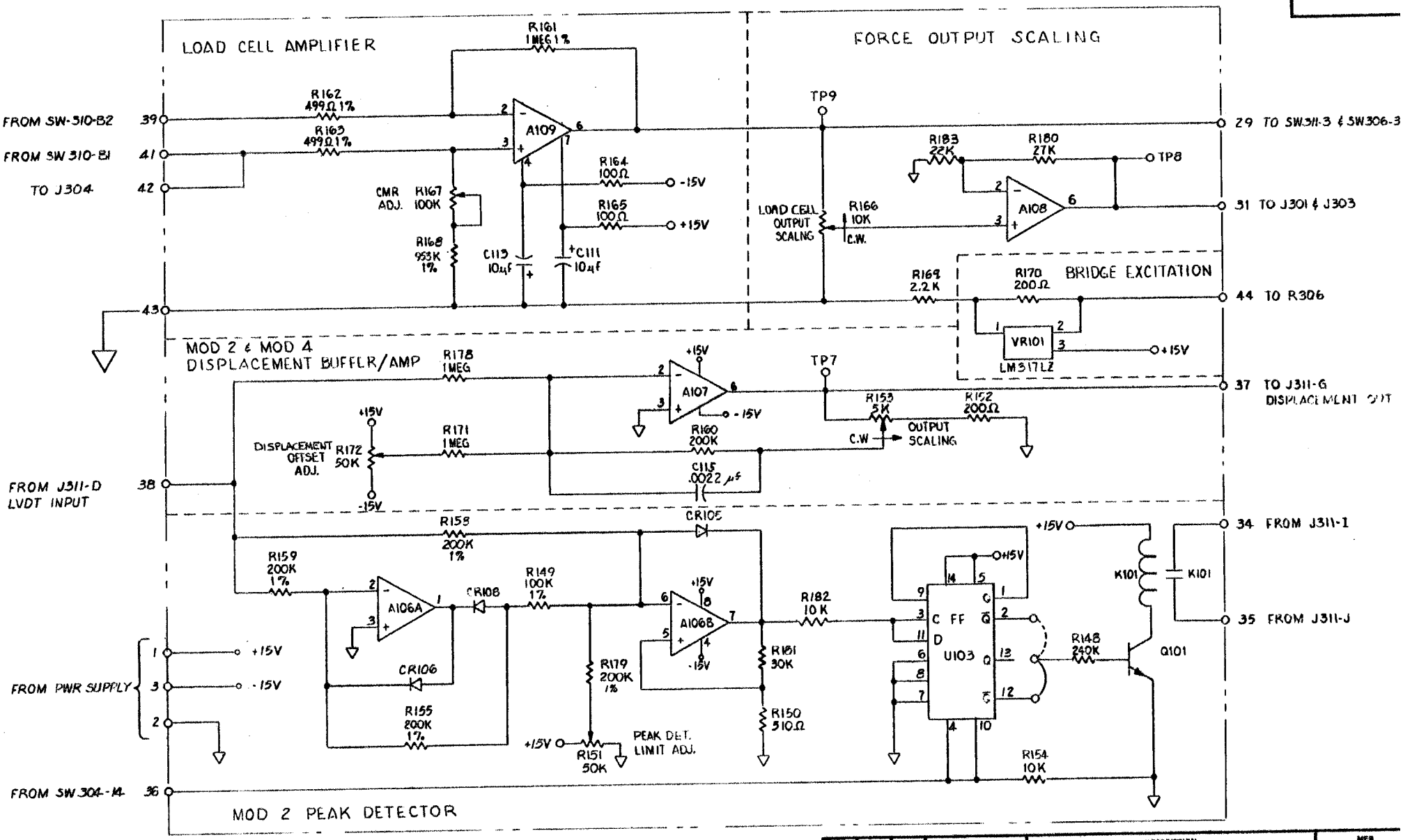

1. ALL DIODES ARE IN914.
2. ALL RESISTORS SHALL BE ¼W ±5% UNLESS OTHERWISE SPECIFIED.

ITEM	QTY	UNITS	PART NO.	DESCRIPTION	MFR.

BILL OF MATERIAL

THIS DOCUMENT CONTAINS PROPRIETARY INFORMATION OF XCITE SYSTEMS AND IS TENDERED SUBJECT TO THE CONDITIONS THAT THE INFORMATION (a) BE RETAINED IN CONFIDENCE (b) NOT BE REPRODUCED OR COPIED IN WHOLE OR IN PART AND (c) NOT BE USED OR INCORPORATED IN ANY PRODUCT EXCEPT UNDER AN EXPRESS WRITTEN AGREEMENT WITH XCITE SYSTEMS

REV.	DESCRIPTION	ECO NO.	APPR. BY	DATE
98	R178 1MEG	88136	TP	10/15/80
97	R158 200K 1%			
	R159 200K 1%			
	R155 200K 1%			
	R179 200K 1%			
	R149 100K 1%			
	R151 50K			
	R154 10K			
	R182 10K			
	R161 30K			
	R150 510Ω			
	R148 240K			
	R153 5K			
	R152 200Ω			
	R160 200K			
	R172 50K			
	R171 1MEG			
	R166 10K			
	R183 22K			
	R180 27K			
	R169 2.2K			
	R170 200Ω			
	R162 499Ω 1%			
	R163 499Ω 1%			
	R164 100Ω			
	R165 100Ω			
	R167 100K			
	R168 953K 1%			
	C113 10μF			
	C111 10μF			
	C115 .0022 μF			
	R169 2.2K			
	R170 200Ω			
	R161 1MEG 1%			

SCALE NTS

LIMITS: 2 PLACE DECIMALS ±.010 UNLESS OTHERWISE SPECIFIED

MATERIAL – HEAT TREAT

FINAL FINISH

USED ON ASSEMBLY

XCITE SYSTEMS CORPORATION

TITLE SCHEMATIC PCB 110-1D

DRWN. BY	HALL	4-80
CHK'D. BY		
APPV'D. BY		

DRAWING LISTS

DRAWING NUMBER C-15358-0 SH 3 of 3

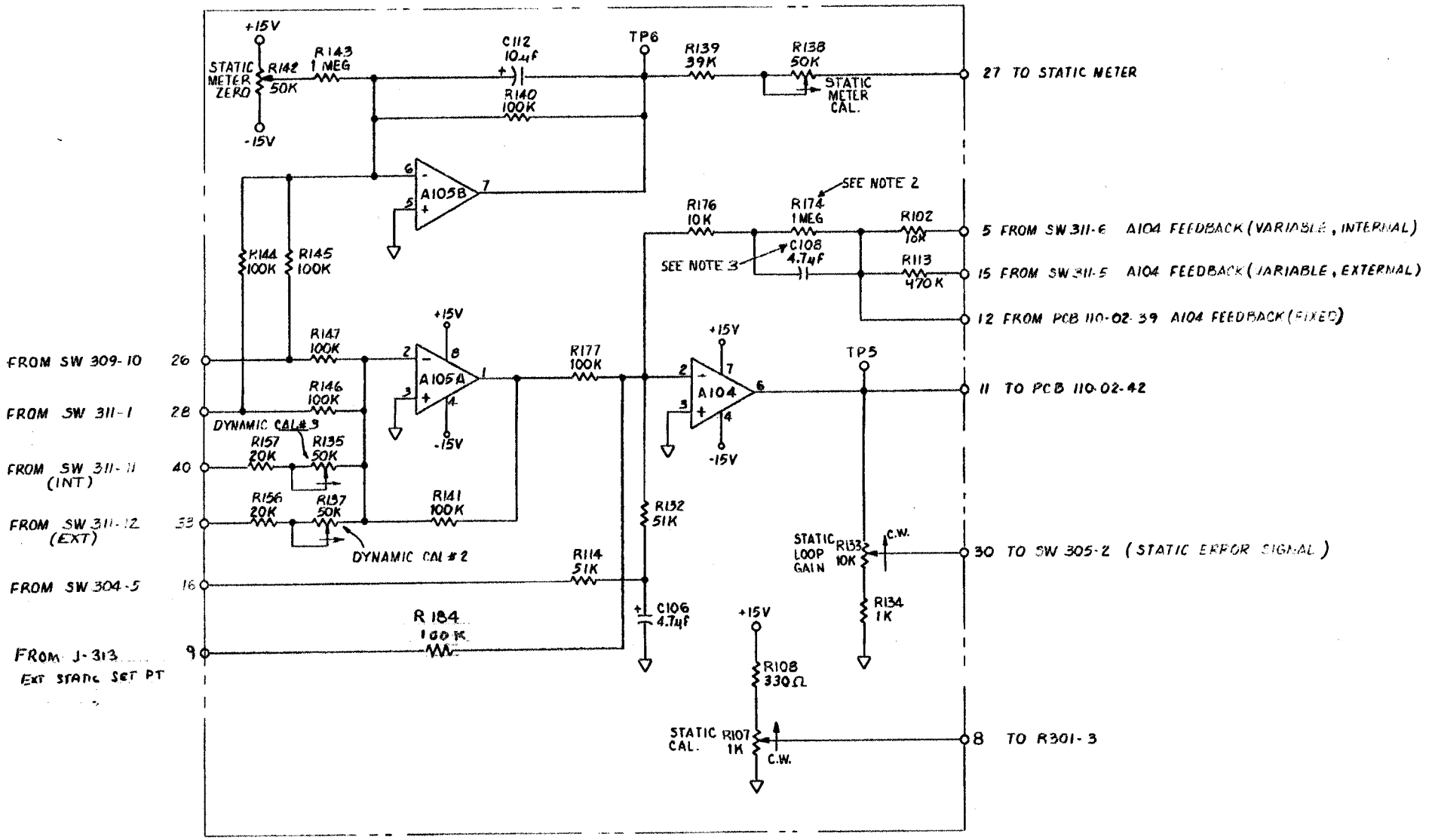

STATIC LOOP

1. ALL RESISTORS SHALL BE ¼W ± 5% UNLESS OTHERWISE SPECIFIED.
2. R174 IS 100K ON PCB 110-01 CONFIGURED WITH MOD 2 OPTION.
3. C108 IS REMOVED ON PCB 110-01 CONFIGURED WITH MOD 2 OPTION.

ITEM	QTY	UNITS	PART NO.	DESCRIPTION	MFR.

BILL OF MATERIAL

THIS DOCUMENT CONTAINS PROPRIETARY INFORMATION OF XCITE SYSTEMS AND IS TENDERED SUBJECT TO THE CONDITIONS THAT THE INFORMATION (a) BE RETAINED IN CONFIDENCE (b) NOT BE REPRODUCED OR COPIED IN WHOLE OR IN PART AND (c) NOT BE USED OR INCORPORATED IN ANY PRODUCT EXCEPT UNDER AN EXPRESS WRITTEN AGREEMENT WITH XCITE SYSTEMS

SCALE	LIMITS: 2 PLACE DECIMALS ±.010 UNLESS OTHERWISE SPECIFIED	XCITE SYSTEMS CORPORATION	
MATERIAL – HEAT TREAT		TITLE	SCHEMATIC PCB 110-01-
FINAL FINISH		DRWN. BY HALL 4-80	DRAWING LISTS
USED ON ASSEMBLY		CHK'D. BY	DRAWING NUMBER C-15358-0

C-15358-008

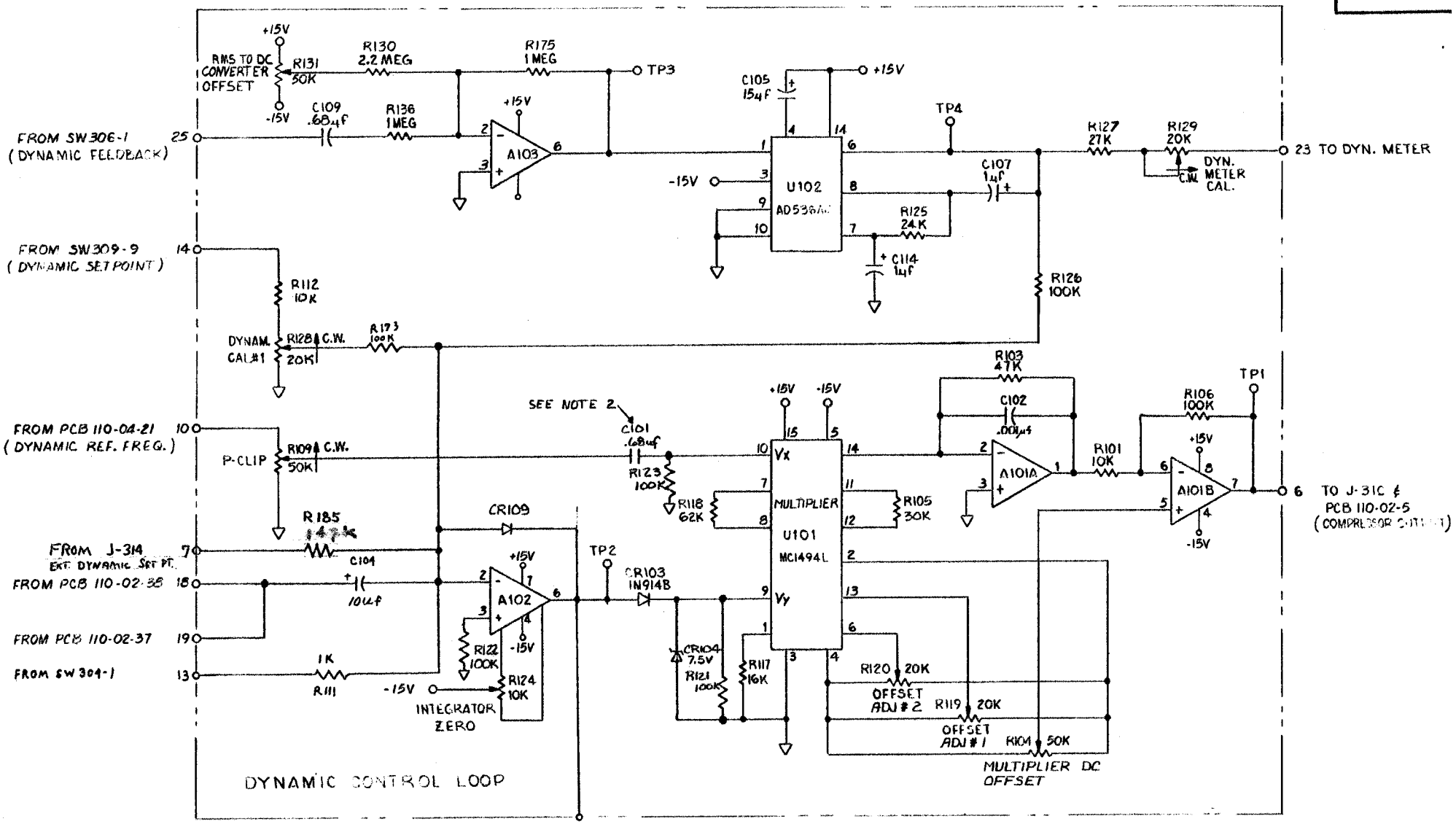

1. ALL RESISTORS SHALL BE 1/4W ± 5% UNLESS OTHERWISE SPECIFIED.
2. C101 IS .068µf FOR PCB 110-01 CONFIGURED WITH MOD 2 OPTION.

ITEM	QTY	UNITS	PART NO.	DESCRIPTION	MFR.

BILL OF MATERIAL

THIS DOCUMENT CONTAINS PROPRIETARY INFORMATION OF XCITE SYSTEMS AND IS TENDERED SUBJECT TO THE CONDITIONS THAT THE INFORMATION (a) BE RETAINED IN CONFIDENCE (b) NOT BE REPRODUCED OR COPIED IN WHOLE OR IN PART AND (c) NOT BE USED OR INCORPORATED IN ANY PRODUCT EXCEPT UNDER AN EXPRESS WRITTEN AGREEMENT WITH XCITE SYSTEMS

REV.	ECO. NO.	CHG. BY	DATE
009		GJZ	10/21/80
008	R112 TO 10K	ADW	10/24/79
007	88136	FHW	12/88

SCALE N.T.S.

LIMITS: 2 PLACE DECIMALS ±.010 UNLESS OTHERWISE SPECIFIED

MATERIAL – HEAT TREAT

FINAL FINISH

USED ON ASSEMBLY

XCITE SYSTEMS CORPORATION

TITLE SCHEMATIC PCB 110-01-

DRWN. BY	HALL	4-80
CHK'D. BY	BEJ	4-80
APPV'D. BY	BEJ	4-80

DRAWING LISTS

DRAWING NUMBER C-15358-009 SH 2 OF 3

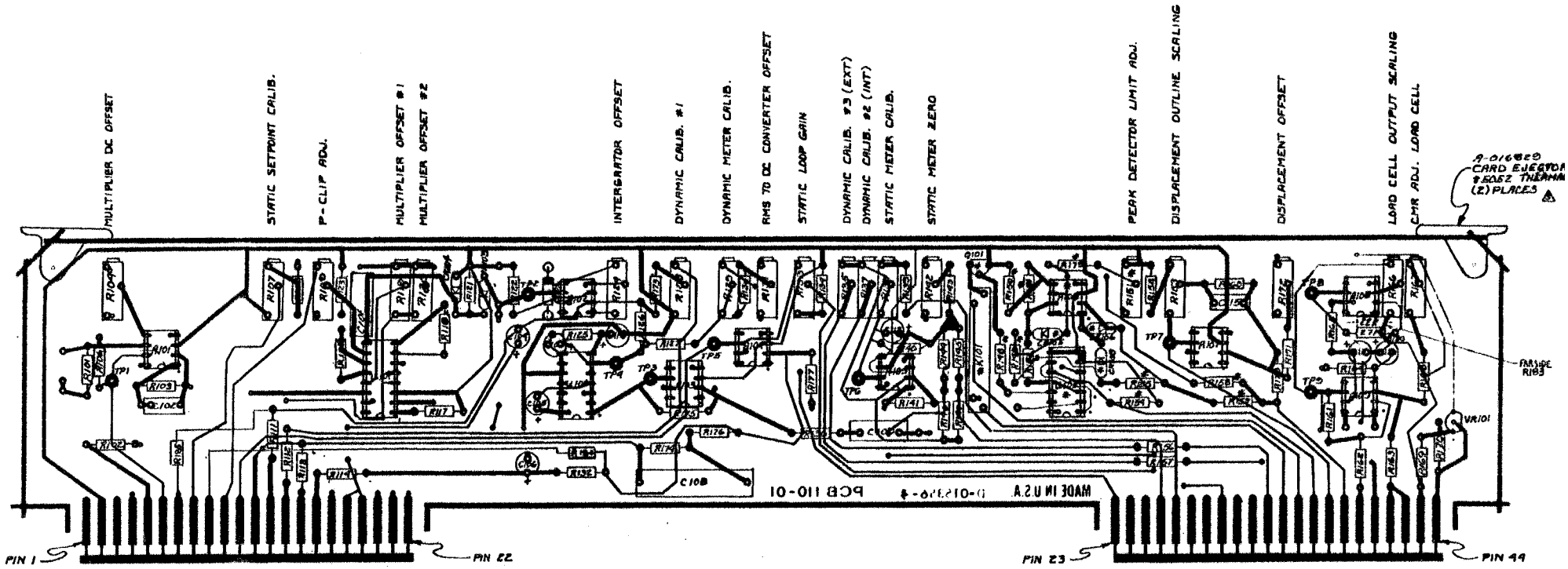

NOTE:

1.) * THESE ITEMS ARE ONLY REQUIRED WHEN MOD 2 OPTION IS USED.

2.) THE FOLLOWING ARE REQ'D FOR MOD 2
DELETE C108
REPLACE C101 WITH .068uF
REPLACE R174 WITH 100K Ω 5% CC RESISTOR M.W.

3) ALL SOCKETS TO BE AMP DETENT LOCKING DIPLOMATE SERIES

ITEM	QTY	UNITS	PART NO	DESCRIPTION	MFR.

BILL OF MATERIAL

THIS DOCUMENT CONTAINS PROPRIETARY INFORMATION OF XCITE SYSTEMS AND IS TENDERED SUBJECT TO THE CONDITIONS THAT IT WILL NOT BE REPRODUCED IN COPIES OR WHOLE OR IN PART AND (a) NOT BE USED INFORMATION (b) BE RETAINED IN CONFIDENCE (c) NOT BE INCORPORATED IN ANY PRODUCT EXCEPT UNDER AN EXPRESS WRITTEN AGREEMENT WITH XCITE SYSTEMS

SCALE	2 X 1
LIMITS: 2 PLACE DECIMALS ±.010 UNLESS OTHERWISE SPECIFIED	
MATERIAL – HEAT TREAT	B/M A-014480
FINAL FINISH	
USED ON ASSEMBLY	

XCITE SYSTEMS CORPORATION

TITLE: PCB 110-01 COMPONENT LOCATION

DRAWN BY	MEL	3-84
CHK'D BY	BET	3-84
APVD BY	BET	3-84

DRAWING SIZE

DRAWING NUMBER: D-015384

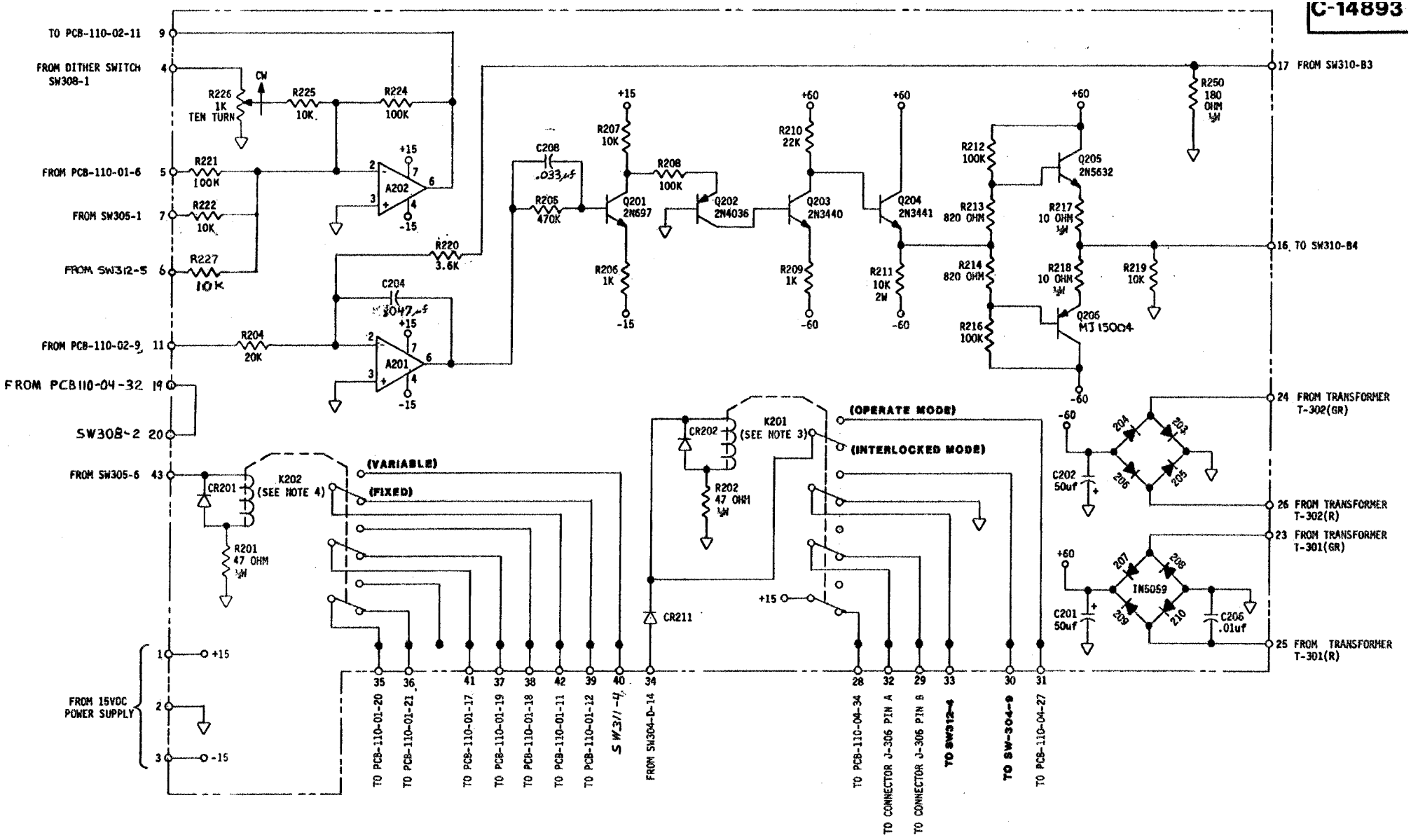

NOTES:

1. ALL RESISTORS ¼ WATT, ±5% CARBON COMPOSITION UNLESS OTHERWISE NOTED.
2. AMPLIFIERS A201 & A202, FAIRCHILD 741C.
3. K201 IS DE-ENERGIZED WHEN SYSTEM IS INTERLOCKED.
4. K202 IS ENERGIZED WHEN LOOP GAIN IS IN "VARIABLE" POSITION.
5. OPTIONAL JUMPER REQ'D FOR CONST. CURRENT MODE OF POWER AMP.
6. REMOVE JUMPER FOR CONST. CURRENT MODE.

ITEM	QTY	UNITS	PART NO.	DESCRIPTION	MFR.

BILL OF MATERIAL

THIS DOCUMENT CONTAINS PROPRIETARY INFORMATION OF XCITE SYSTEMS AND IS TENDERED SUBJECT TO THE CONDITIONS THAT THE INFORMATION (a) BE RETAINED IN CONFIDENCE (b) NOT BE REPRODUCED OR COPIED IN WHOLE OR IN PART AND (c) NOT BE USED OR INCORPORATED IN ANY PRODUCT EXCEPT UNDER AN EXPRESS WRITTEN AGREEMENT WITH XCITE SYSTEMS

REV.	ECO. NO.	CHG. BY	DATE
08		GWS	10/31/00
07	9K055	ADW	7/10/91
06	88136	AWW	12/88

SCALE ——

LIMITS: 2 PLACE DECIMALS ±.010 UNLESS OTHERWISE SPECIFIED

MATERIAL – HEAT TREAT

FINAL FINISH

USED ON ASSEMBLY

XCITE SYSTEMS CORPORATION

TITLE SCHEMATIC - PCB - 110 - 02

DRAWN. BY AWW 11-15-78

CHK'D. BY BEJ 11-15-78

DRAWING LISTS EFFECTIVE S/N 350 AND ABOVE

DRAWING NUMBER C-14893-

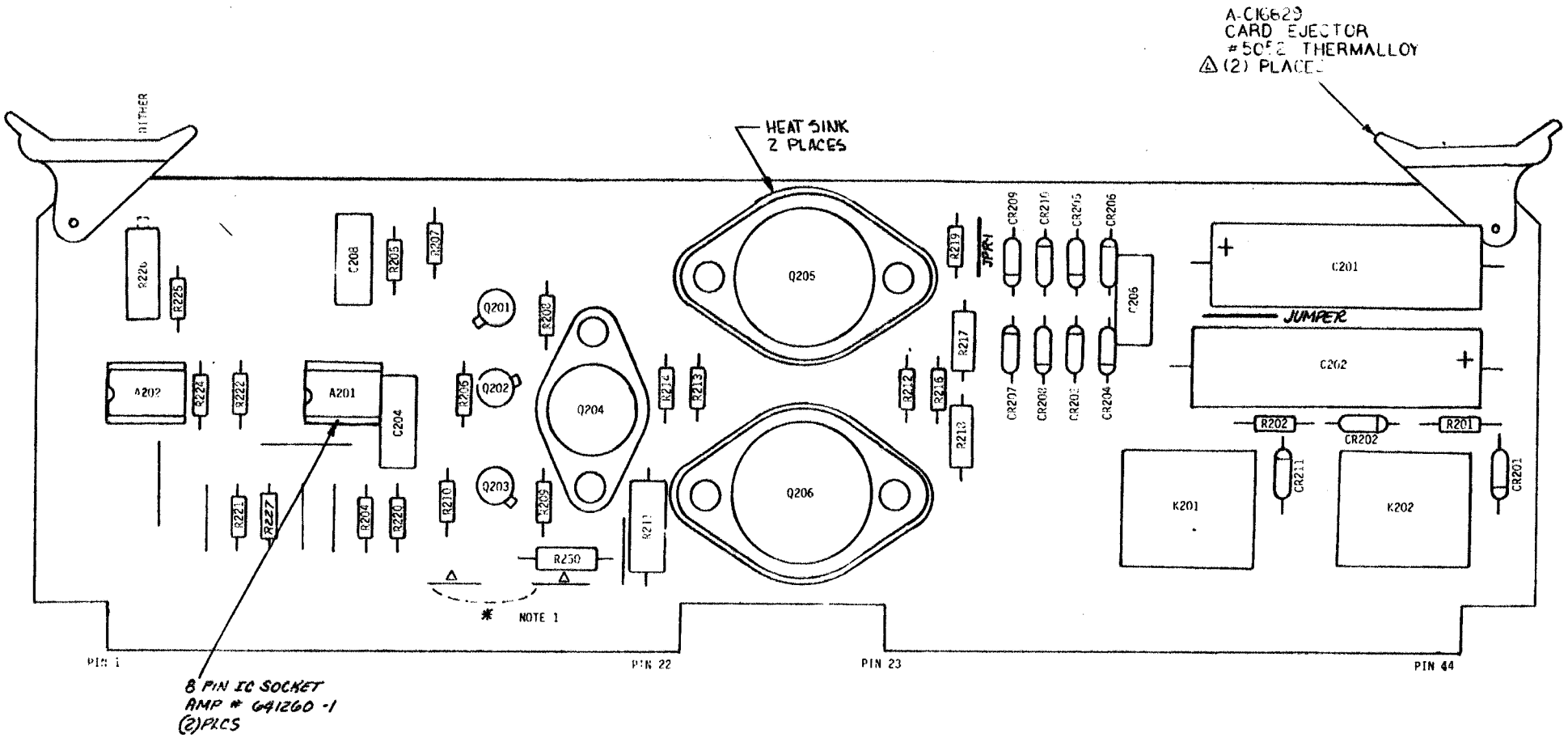

NOTES:

1. △ JUMPERS REQ'D FOR VOLTAGE MODE (2 JUMPERS)
   * R250 & JUMPER REQ'D FOR CURRENT MODE (1 JUMPER)
2. STAMP ASSY NO. AND S/N ON BOARD

ITEM	QTY	UNITS	PART NO.	DESCRIPTION	MFR.

BILL OF MATERIAL

THIS DOCUMENT CONTAINS PROPRIETARY INFORMATION OF XCITE SYSTEMS AND IS TENDERED SUBJECT TO THE CONDITIONS THAT THE INFORMATION (a) BE RETAINED IN CONFIDENCE (b) NOT BE REPRODUCED OR COPIED IN WHOLE OR IN PART AND (c) NOT BE USED OR INCORPORATED IN ANY PRODUCT EXCEPT UNDER AN EXPRESS WRITTEN AGREEMENT WITH XCITE SYSTEMS

ECO. NO.	CHG. BY	DATE
90063	ADW	6/21/90
86191	EBC	11/26/86
86169	EBC	10/86
86094	[illegible]	6/4/86
[illegible]	[illegible]	[illegible]

SCALE

LIMITS: 2 PLACE DECIMALS ±.010 UNLESS OTHERWISE SPECIFIED

MATERIAL – HEAT TREAT: A-D11106

FINAL FINISH

USED ON ASSEMBLY

XCITE SYSTEMS CORPORATION

TITLE: ASSY - PCB - 110 - 02

DRWN. BY: AJW 11-15-78

CHK'D. BY

DRAWING LISTS: EFFECTIVE S/N 310 AND ABOVE

DRAWING NUMBER: C-14881-7

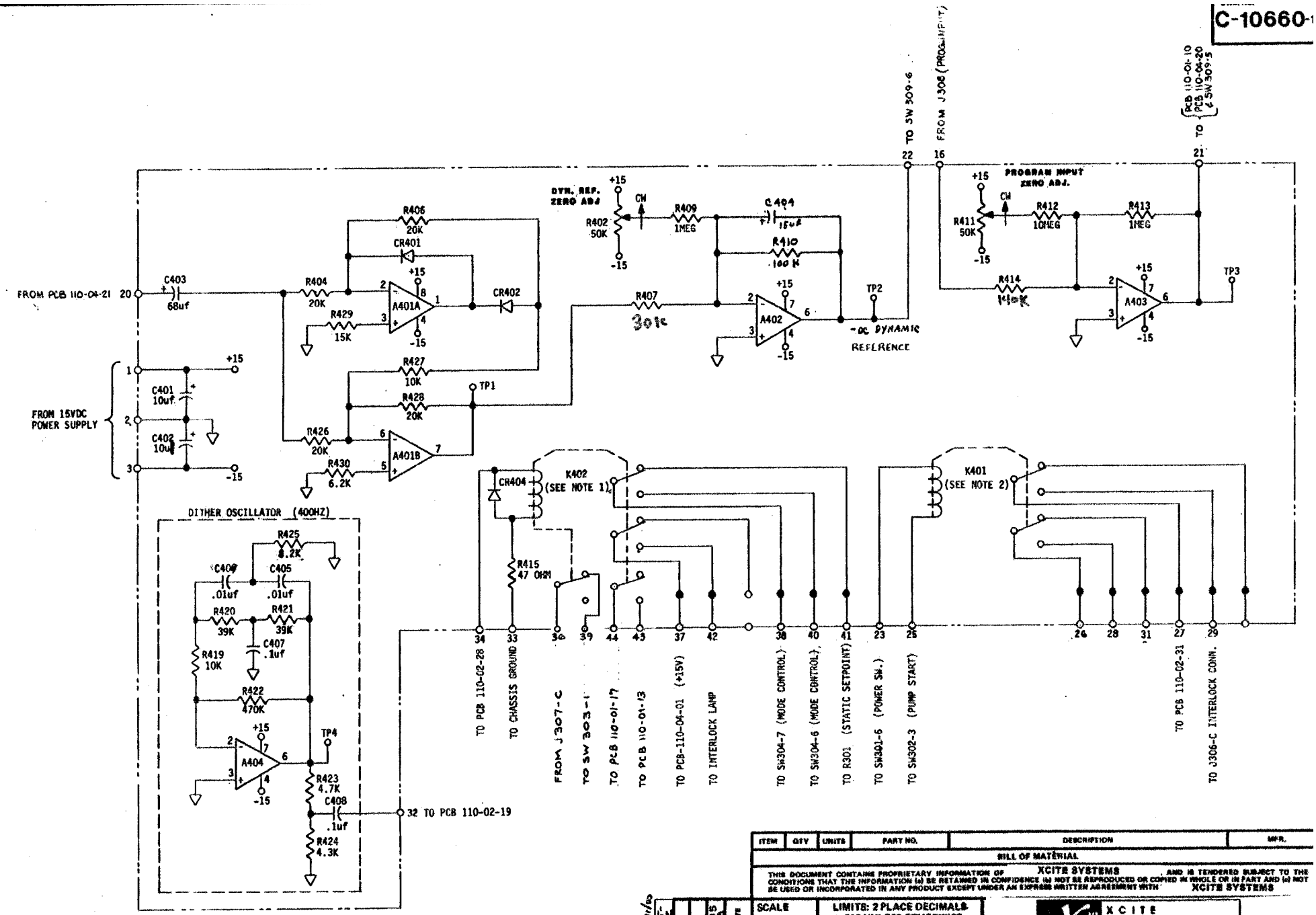

NOTES:

1. RELAY 402 IS OPERATED WHEN SYSTEM IS IN INTERLOCK MODE.
2. RELAY 401 PUTS SYSTEM INTO INTERLOCK MODE IF HYDRAULIC PUMP IS STOPPED.
3. A402 - A404 ARE 741C. ALL RESISTORS ARE ¼W CARBON COMPOSITION UNLESS OTHERWISE NOTED. CR401 - CR403 ARE IN914, CR404 IS IN5059.
4. A401 IS 1458C.

ITEM	QTY	UNITS	PART NO.	DESCRIPTION	MFR.

BILL OF MATERIAL

THIS DOCUMENT CONTAINS PROPRIETARY INFORMATION OF XCITE SYSTEMS . AND IS TENDERED SUBJECT TO THE CONDITIONS THAT THE INFORMATION (a) BE RETAINED IN CONFIDENCE (b) NOT BE REPRODUCED OR COPIED IN WHOLE OR IN PART AND (c) NOT BE USED OR INCORPORATED IN ANY PRODUCT EXCEPT UNDER AN EXPRESS WRITTEN AGREEMENT WITH XCITE SYSTEMS

REV.	ECO NO.	ENGR. BY	DATE
7	78030	AJW	11-15-78

SCALE ——— LIMITS: 2 PLACE DECIMALS ±.010 UNLESS OTHERWISE SPECIFIED

MATERIAL — HEAT TREAT ———

FINAL FINISH ———

USED ON ASSEMBLY ———

XCITE SYSTEMS CORPORATION

TITLE
SCHEMATIC - PCB - 110 - 04

DRWN. BY	AJW	11-15-78
CHK'D. BY		

DRAWING LISTS: EFFECTIVE S/N 350 AND ABOVE

DRAWING NUMBER: C-10660-

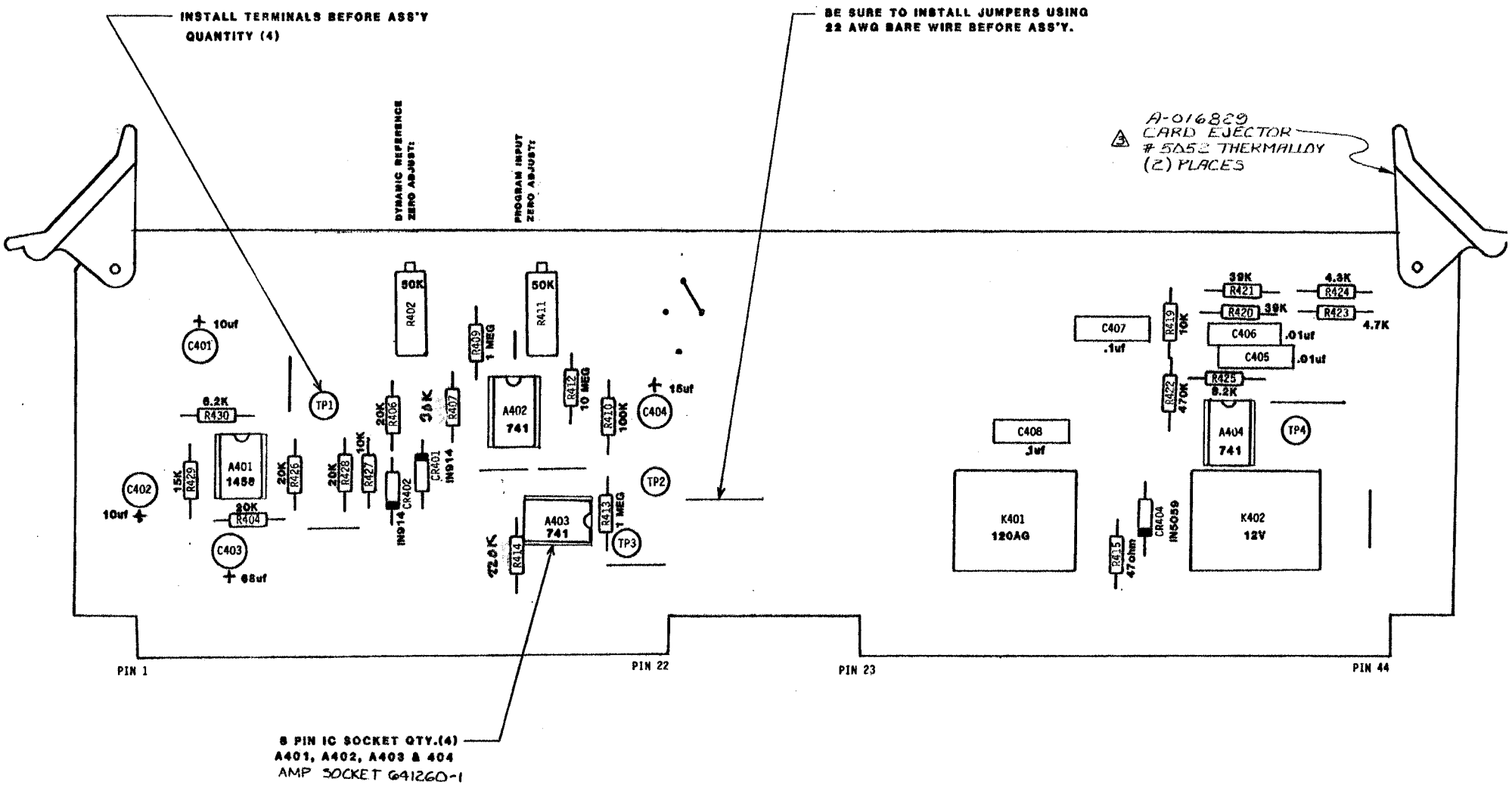

NOTES:
1. STAMP ASSY NO. AND S/N ON BOARD.

ITEM	QTY	UNITS	PART NO.	DESCRIPTION	MFR.

BILL OF MATERIAL

THIS DOCUMENT CONTAINS PROPRIETARY INFORMATION OF XCITE SYSTEMS AND IS TENDERED SUBJECT TO THE CONDITIONS THAT THE INFORMATION (a) BE RETAINED IN CONFIDENCE (b) NOT BE REPRODUCED OR COPIED IN WHOLE OR IN PART AND (c) NOT BE USED OR INCORPORATED IN ANY PRODUCT EXCEPT UNDER AN EXPRESS WRITTEN AGREEMENT WITH XCITE SYSTEMS

REV.	DESCRIPTION	ECO. NO.	CHG. BY	DATE
6	8/3/75 P.C.			10/15/80
5	8/6/69 ERL	#1866		1-23
4	82183			11-82
3	82/53			
02				
01	82011		PB	1/82

SCALE

LIMITS: 2 PLACE DECIMALS ±.010 UNLESS OTHERWISE SPECIFIED

MATERIAL – HEAT TREAT
B/M A-11108

FINAL FINISH

USED ON ASSEMBLY

XCITE SYSTEMS CORPORATION

TITLE
ASSY - PCB-110-04

DRWN. BY	AJW	11-19-76
CHK'D. BY		
APP'D. BY		

DRAWING LISTS
EFFECTIVE S/N 310 AND ABOVE

DRAWING NUMBER
C-14882-6

8. Parts List

Xcite reserves the right to substitute parts without notice.

Component Part Number	Description
Chassis	
R301, 303, 307	1K, 10 Turn 5000 Series Pot
R302	50K, Trim Pot 3059J-1-503-M
R304, 311, 313	10K, Trim Pot 3059J-1-103-M
R305	Load Cell Dependent Phone Jack
R306	500 Ohm, Trim Pot 3059J-1-501-M
R308, 309, 310	47K, 1/2W, 5%
R312	110K, 1/4W, 5%
R314	100 Ohms, 1/4W, 5%
C301	50 MFD, 50V 7121L (39D)
T301, 302	Transformer, F-90X
T303	Supply, HAA-15-8
F301	Fuse, AGC 3, 3 amp
SW301	5A DPDT, 520-101G-51-A1H
SW302, 303	5A SPUT, 518-1016-51-A1H
SW304	Rotary 4P3T, 44A60-04-1-3N
SW305, 309, 311	4PDT Locking Toggle, MTL-406N
SW306, 312	DPDT Locking Toggle, MTL-206N
SW307, 308	SPDT Locking Toggle, MTL-106D
SW310	Rotary 5PDT, 71B30, 01-5-02N
M101, 102	100 Microamp, 4.5", 7045-3602-0000 API
J301, 302, 303	BNC Connector, UG-1094A/U
J304	Phone Jack, 12-B
J305	MS3102A-18-1S
J306	MS3102A-18-4S
J307	MS3102A-18-12P
J311	MS3102A-18-1P
KN301	Knob, DS70-2BD-2 (Rear)
KN302	Knob, DS70-3-2 (Front)

Component Part Number	Description
KN303, 304, 305	Dial, Turns Counting, 2606
L301	515-0012, Lamp, 6.5. Lamp Holder
L302	RA877 Crimp Lug

PCB 110-01

R101, 102, 112, 176	10K, 1/4W, 5%
R103	47K, 1/4W, 5%
R104, 131, 135, 137, 138, 142, 151, 172	50K, Trim Pot, 784 Series
R105	30K, 1/4W, 5%
R106, 121, 122, 123, 126, 140, 141, 144, 145, 146, 147, 173, 177	100K, 1/4W, 5%
R107	1K, Trim Pot, 784 Series
R108	330 Ohm, 1/4W, 5%
R109	50K, Trim Pot
R110, 115, 116	Not used
R111, 134	1K, 1/4W, 5%
R113	470K, 1/4W, 5%
R114, 132	51K, 1/4W, 5%
R117	16K, 1/4W, 5%
R118	62K, 1/4W, 5%
R119, 120, 128, 129	20K, Trim Pot, 784 Series
R124, 133, 166	10K, Trim Pot, 784 Series
R125	24K, 1/4W, 5%
R127, 180	27K, 1/4W, 5%
R130	2.2M, 1/4W, 5%
R136, 143, 171, 175, 178	1M, 1/4W, 5%
R139	39K, 1/4W, 5%
*R148	240K, 1/4W, 5%
*R149	100K, 1/4W, 1%
*R150	510 Ohm, 1/4W, 5%
R152, 170	200 Ohm, 1/4W, 5%
R153	5K, Trim Pot, 784 Series
*R154, 182	10K, 1/4W, 5%
*R155, *158, *159, 160, 179	200K, 1/4W, 5%
R156, 157	20K, 1/4W, 5%
R161	1M, 1/4W, 1%
R162, 163	499 Ohms, 1/4W, 1%
R164, 165	100 Ohms, 1/4W, 5%
R167	100K, Trim Pot, 784 Series

Component Part Number	Description
R168	953K, 1/4W, 1%
R169	2.2K, 1/4W, 5%
R174	1M, 1/4W, 5%, Mod 4, 100K, 1/4W, 5%, Mod 2
*R181	30K, 1/4W, 5%
*R182	10K, 1/4W, 5%
R183	22K, 1/4W, 5%
R184	100K, 1/4W, 5%
R185	147K, 1/4W, 5%
C101	.68 MF Mod 4, .068 MF Mod 2
C102	.001 MF, 160-.015-20-400-C
C103, 110	Not Used
C104, 111, 112, 113	10 MF, 20V Dipped Tant.
C105	15 MF, 20V Dipped Tant.
C106	4.7 MF, 20V Dipped Tant.
C107, 114	1 MF, 20V Dipped Tant.
C108	4.7 MF, 100V 160-4.7-20-100-H (Mod 4 option only) (Not used for Mod 2)
C109	.68 MF, 100V 160-.68-20-100-D
C115	.0022 MF, 160-.0022-400-C
CR101, 102, 107	Not Used
CR103, *105, *106, *108	IN914
CR104	IN4737A
CR109	
U101	MC1494L
U102	AD536AJD
*U103	MC14013B
VR101	LM317LZ
A101, 105, *106	MC1458CP1
A102, 108	MC1741CP
A103, 104, 107	LF13741N
A109	LM308AN
K101	SPST, 360-12-1A
*Q101	MPSA13

Component Part Number	Description
PCB 110-02	
R201, 202	47 Ohm, 1/2W, 5%
R203	Not Used
R204	20K, 1/4W, 5%
R205	470K, 1/4W, 5%
R206, 209	1K, 1/4W, 5%
R207, 219, 222, 225	10K, 1/4W, 5%
R208, 212, 216, 221, 224	100K, 1/4W, 5%
R210	220K, 1/4W, 5%
R211	10K, 2W, 5%
R213, 214	820 Ohm, 1/4W, 5%
R215, 223	Not Used
R217, 218	10 Ohm, 1/2W, 5%
R220	3.6K, 1/4W, 5%
R226	1K, Trim Pot, 784 Series
R227	10K, 1/4W, 5%
R250	Valve Dependent, 1/4W, 5%
C201, 202	50 MF, 75V TVA-1343
C203, 205, 207	Not Used
C204	.047 MF, 160-.015-400-C
C206	.01 MF, 160-.01-630-C
C208	.033 MF, 160-.033-250-C
CR201 thru 211	IN5059
A201, 202	LF356N
K201, 202	Relay, 4PDT 1315-4C-12VDC
Q201	2N697
Q202	2N4036
Q203	2N3440
Q204	2N3441
Q205	2N5632
Q206	2N6229

Component Part Number	Description
PCB 110-04	
R401, 403, 405, 408, 416, 417, 418	Not Used
R402, 411	50K, Trim Pot, 784 Series
R404, 406, 426, 428	20K, 1/4W, 5%
R407	30K, 1/4W, 5%
R409, 413	1M, 1/4W, 5%
R410	100K, 1/4W, 5%
R412	10M, 1/4W, 5%
R414	140K, 1/4W, 5%
R415	47 Ohm, 1/4W, 5%
R419, 427	10K, 1/4w, 5%
R420, 421	39K, 1/4W, 5%
R422	470K, 1/4W, 5%
R423	4.7K, 1/4W, 5%
R424	4.3K, 1/4W, 5%
R425	8.2K, 1/4W, 5%
R429	15K, 1/4W, 5%
R430	6.2K, 1/4W, 5%
C401, 402	10 MF, 20V, Dipped Tant.
C403	68 MF, 20V, Dipped Tant.
C404	15 MF, 20V, Dipped Tant.
C405, 406	.01 MF, 160-.01-10-630-C
C407, 408	.1 MF, 160-.1-10-100-C
CR401, 402	N914
CR403	Not Used
CR404	IN5059
K401	Relay, 1310-4C-210AG
K402	Relay, 1315-4C-T2VDC
A401	MC1458CP
A402, 403, 404	LF356 or LM741

9. Calibration

The Xcite Master Controller is calibrated at the factory. Recalibration is required only if certain active components are replaced, or if a potentiometer is replaced.

Calibration need not be done in the order listed, nor are all adjustments required if one circuit is to be re-calibrated. Individual calibration may be performed as needed.

- Before beginning calibration, disconnect the head cable from J305.

- With power off, zero the static and dynamic meters, using the adjustment screw beneath each meter face.

- With power on but the pump off, check the following adjustments and readjust as described, if necessary. Place the following switches and controls in the positions given:

DITHER	OFF
STATIC SET POINT	0
DYNAMIC SET POINT	0
MODE CONTROL	STATIC
STATIC CONTROLLED VARIABLE	EXTERNAL
DYNAMIC CONTROLLED VARIABLE	EXTERNAL
TENSION/ COMPRESSION	COMPRESSION/ CCW

9.1. Equipment Needed

9.1.1. Stiff Test Structure (capable of w/standing the full rated force of the Exciter Head)

9.1.2. A 4 ½ digit Digital Multimeter

9.1.3. Oscilloscope

9.1.4. Signal Generator (audio frequency range)

9.1.5. FFT Spectrum Analyzer (if curves are to be run)

9.1.6. Trim pot adjustment tool or a small screwdriver

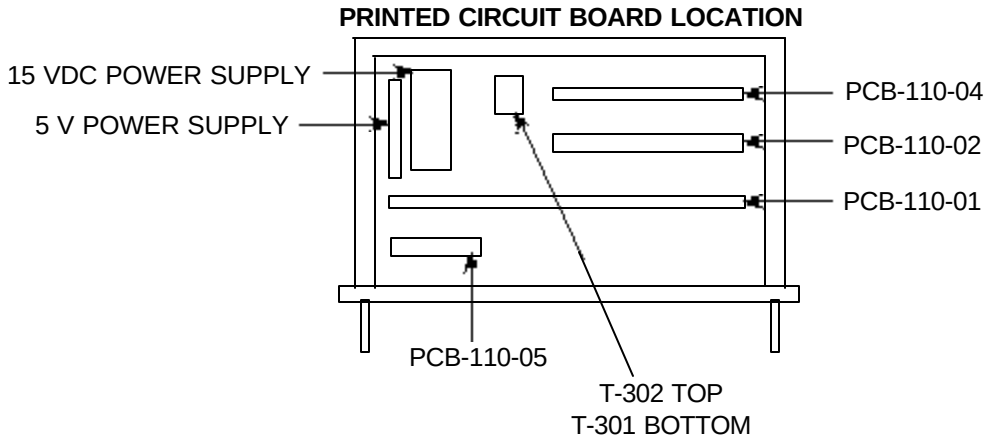

9.2. Master Controller

9.2.1. Meter Zero Adjustments

- Turn the Master Controller off.
- The Static and Dynamic meters should be resting precisely at zero.

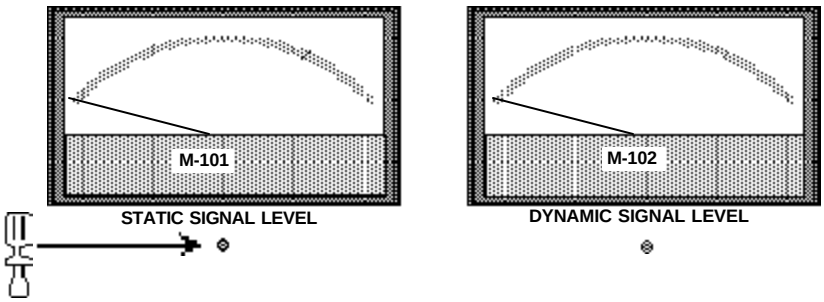

- If necessary, adjust the meters to zero using the small holes centered under each front panel meter.
- Turn the Master Controller on.

9.2.2. +/-15 Volt Supply Check

- Check for +15.00 Volts at 110-01-1 and -15.00 Volts at 110-01-3.
- If necessary adjust the supplies to within +/-10mV using the trim pots located on the power supply (mounted to the left rear of the chassis).

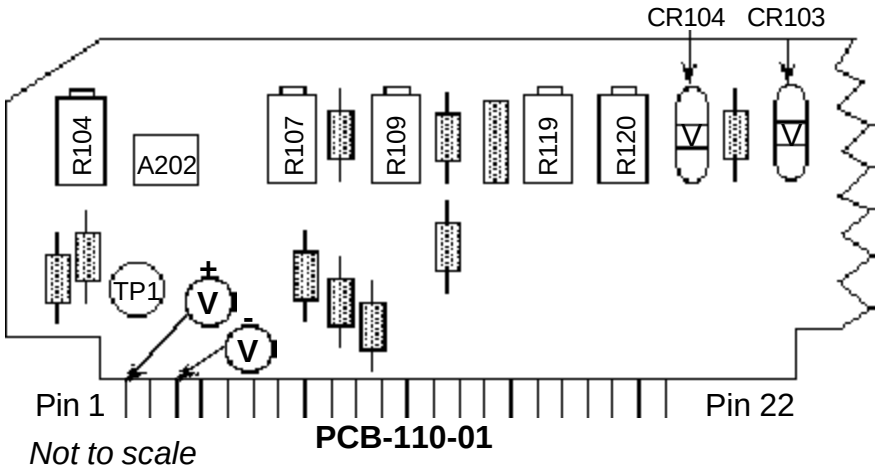

PCB-110-01

Not to scale

9.2.3. +/-60 Volt Supply Verification

Check for roughly +/-60 Volts at the large capacitors on the upper right corner of the 110-02 board. *No adjustment is possible.*

9.2.4. Load Cell Excitation Voltage Verification

Check for 12.0V +/-.3V at 110-01-44

9.2.5. Master Controller Board 110-04 Calibration Procedure

Initial Setup

Apply a shorted BNC cable or a 50Ω BNC terminator to the Program Input (J308).

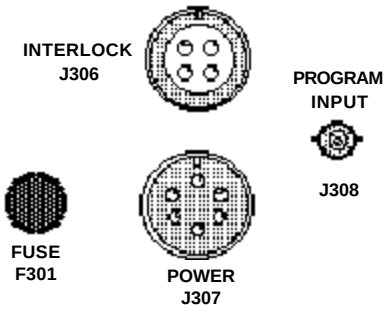

Program Input Offset Adjustment
Adjust R411 for 0mV at TP3.

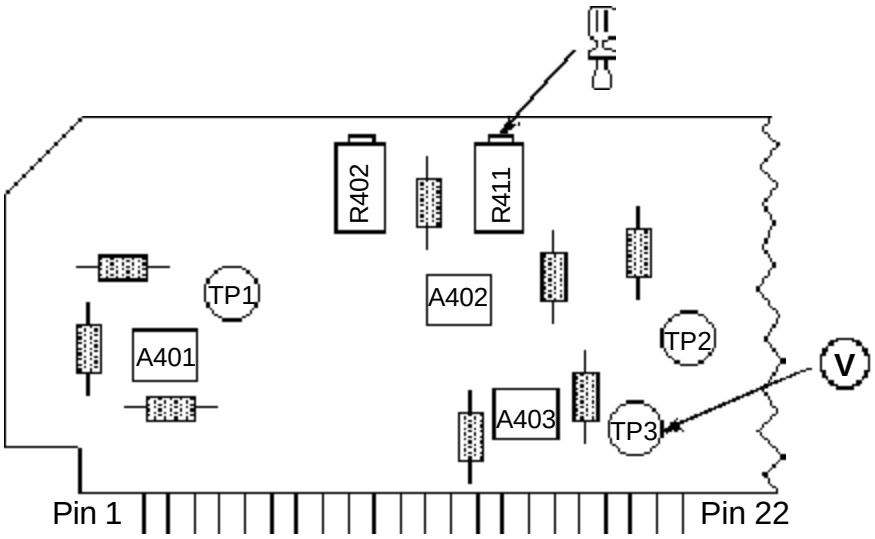

PCB-110-04

Not to scale

Dynamic Reference Offset Adjustment
Adjust R402 for 0mV at TP2.

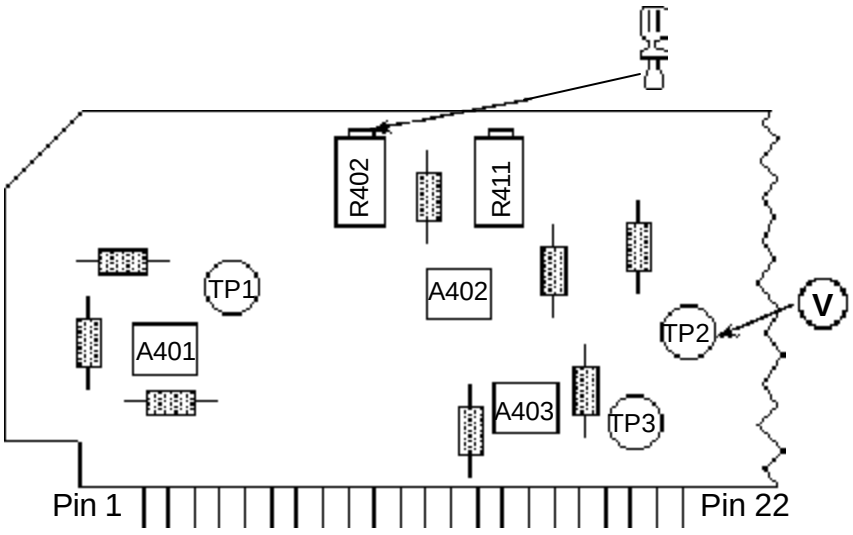

PCB-110-04

Not to scale

Dynamic Reference AC to DC Level Verification

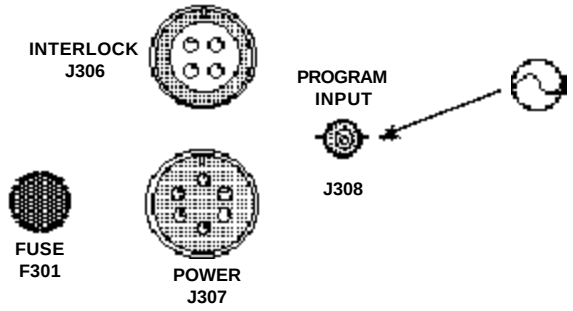

- Apply 1.000V rms to the Program Input (J308).
- Check for roughly -10.8V DC at TP2.
- Remove signal from the Program Input (J308).

Dither Oscillator Verification

Check for a 26V peak to peak, 360 Hz Triangle wave (+/-20 Hz) at TP4.

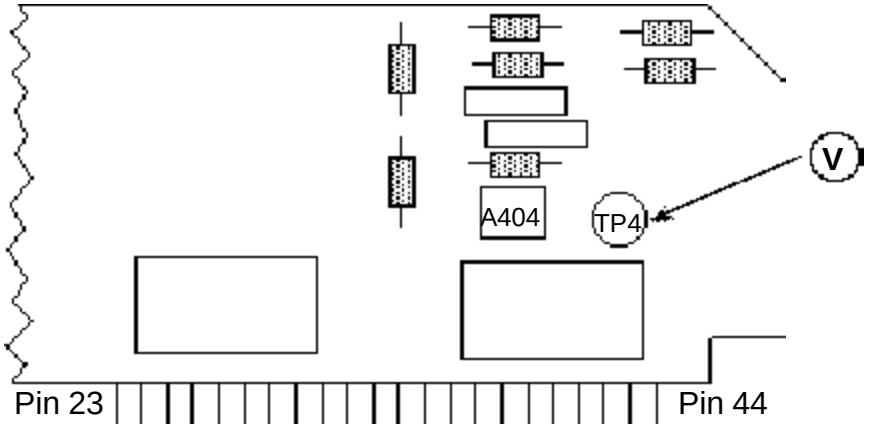

Not to scale

PCB-110-04

9.2.6. Master Controller Board 110-02 Calibration Procedure

Dither Level Calibration

- Set *DITHER* switch (SW308) to *ON.*
- Adjust R226 for 0.500V rms at 110-02-9.
- Set *DITHER* switch to *OFF*.

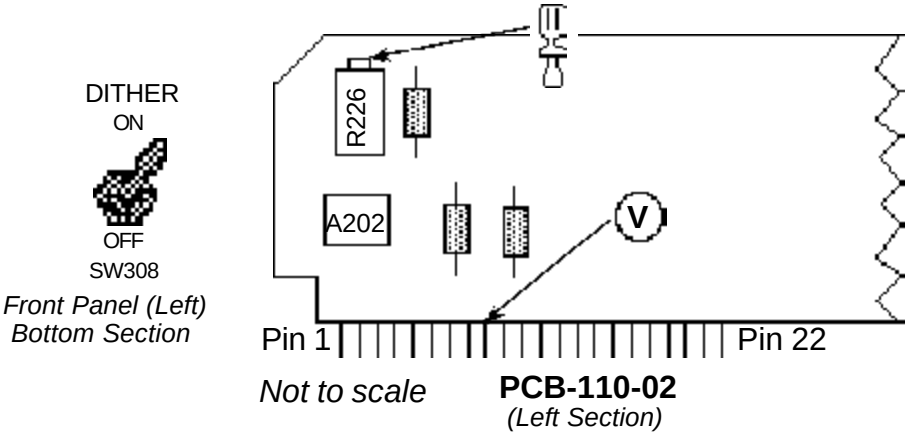

9.2.7. Master Controller Board 110-01 Calibration Procedure

Set front and rear panel switches and adjustments as follows:

Dither	(SW308)	Off
Load Cell Calibrate/ Operate	(SW307)	Operate
Frequency	(SW309)	Low
Power Amp Input	(SW312)	Internal
Static Preload	(SW310)	Compression
Static Controlled Variable	(SW311)	External
Dynamic Controlled Variable	(SW306)	External
Static Gain	(SW305)	Fixed
Standby Level	(R313)	Full CCW
Static Set Point Level	(R301)	0.0
Dynamic Set Point Level	(R303)	0.0
Static Gain Level	(R307)	5.0

External Static and Dynamic Variable Input Calibration

- Apply a 1.000V rms, 100 Hz sine wave to the External Static Variable Input (J309).
- Adjust External Static Cal (R311) for .500V rms at 110-01-28 (WHT/ RED wire).
- Apply a 1.000V rms, 100 Hz sine wave to the External Dynamic Variable Input (J302).
- Adjust External Dynamic Cal (R304) for .500V rms at 110-01-25 (WHT/ BLK wire).
- Remove signal

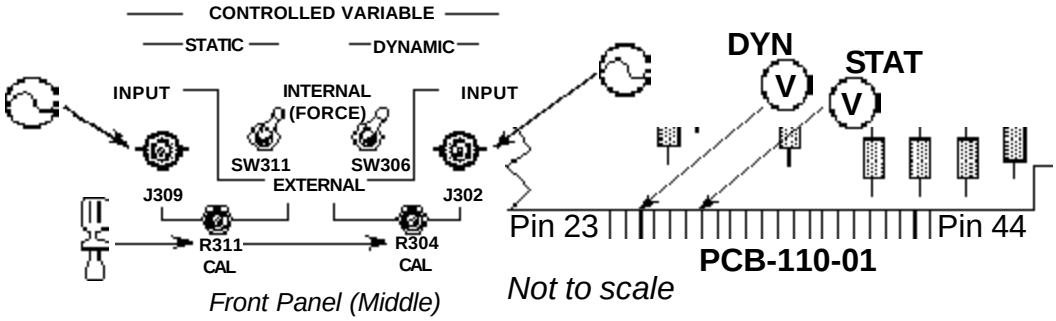

Front Panel (Middle)

Load Cell Amplifier Common Mode Null Adjustment

- Apply a 1.000V rms, 100 Hz sine wave to 110-01-39 (BLK wire) and 110-01-41(SILVER wire).
- Adjust R167 for minimum 100 Hz signal at TP9.
- Remove signal from 110-01-39 and 110-01-41.

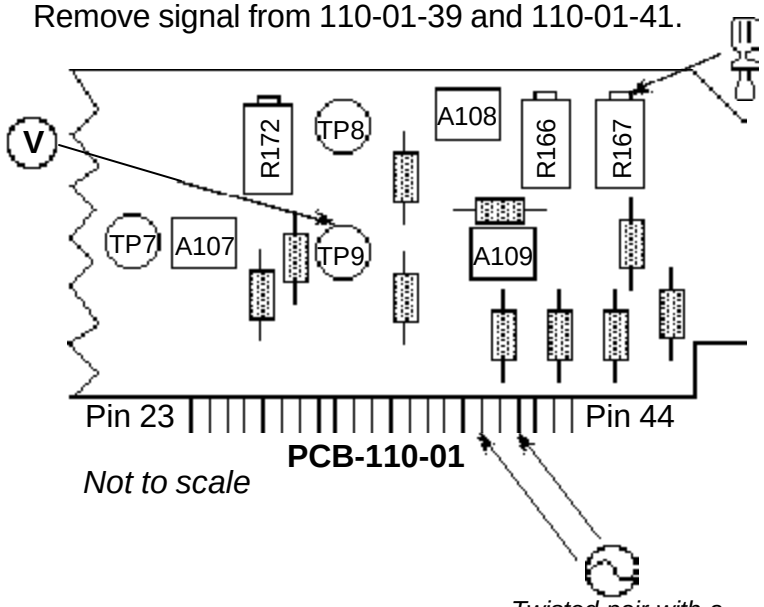

Twisted pair with a 12" maximum length.

Meter Amplifier Zero Offset Adjustments
With no signals applied, make the following settings:

Static Set Point Level	(R301)	0.0
Dynamic Set Point Level	(R303)	0.0
Static Controlled Variable	(SW311)	External
Dynamic Controlled Variable	(SW306)	External

- Adjust (Static Offset) R142 for 0mV at TP6.
- Adjust (Dynamic Offset) R131 for 0mV at TP3.

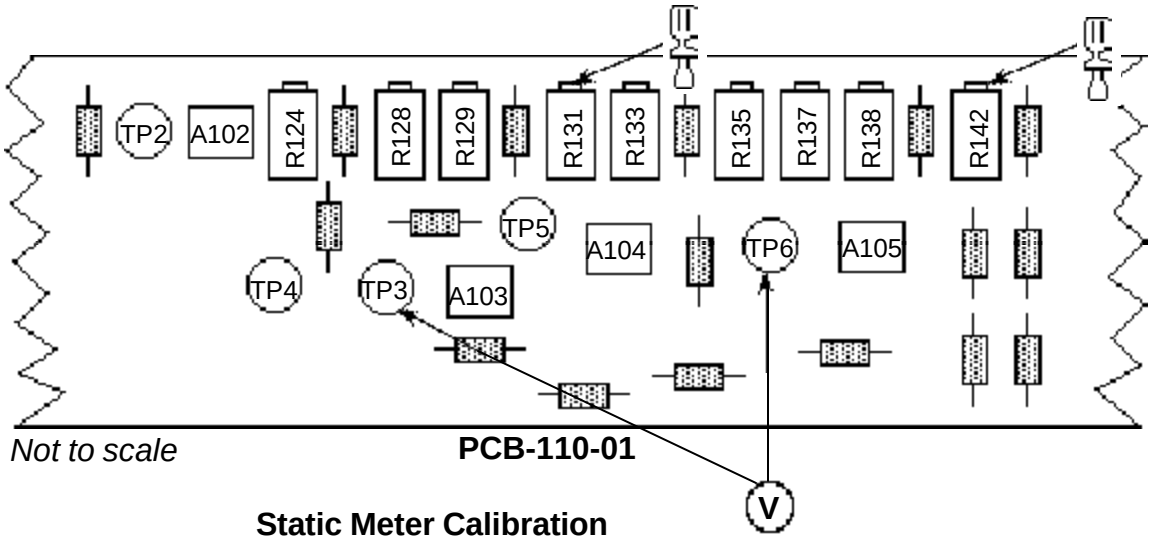

Not to scale **PCB-110-01**

Static Meter Calibration

- Apply 5.000V DC at 110-01-28 (WHT/ RED wire).
- Adjust R138 to set Static Meter deflection at 100%.
- Remove signal from 110-01-28.

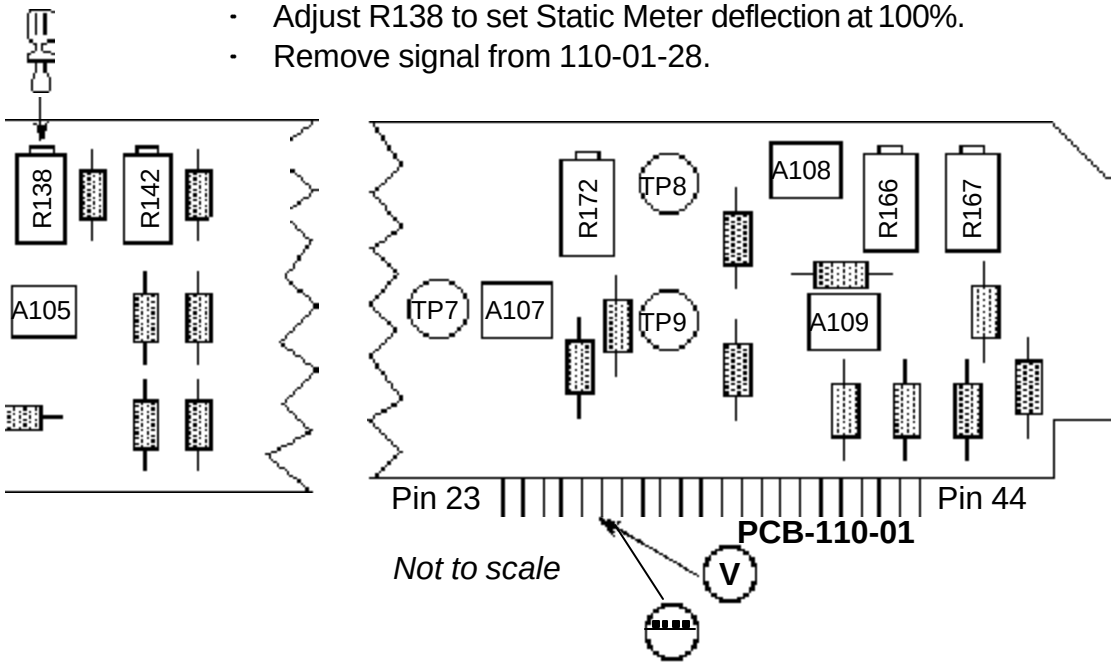

PCB-110-01

Not to scale

Dynamic Meter Calibration

Pre RMS Converter Check

- Set the Dynamic Control Variable (SW306) to External.
- Apply a 100 Hz sine wave to the Dynamic Variable Input (J302).
- Adjust Signal level for 1.000V rms at 110-01-25 (WHT/ BLK wire).
- Check for an inverted 1.0V rms +/-5% signal at TP3.

RMS Converter Check

Check for 1.00V DC at TP4.

Dynamic Meter Calibration Adjustment

- Adjust the signal level for 1.77V rms at 110-01-25 (WHT/ BLK wire).
- Adjust R129 for 50% full scale deflection of Dynamic Meter.
- Remove signal from Dynamic Variable Input (J302).

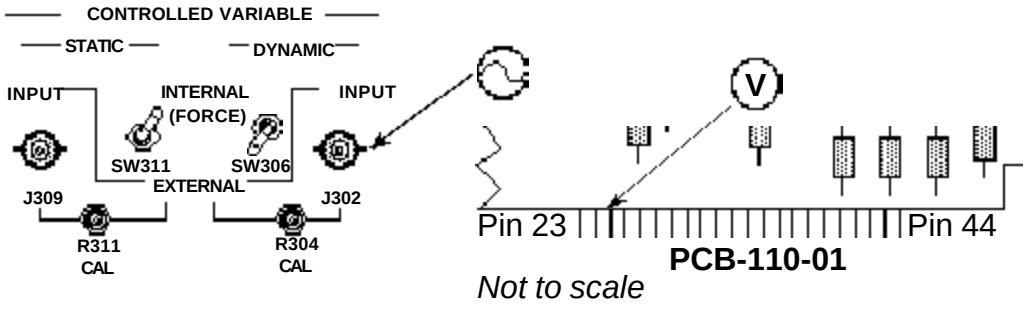

PCB-110-01

Not to scale

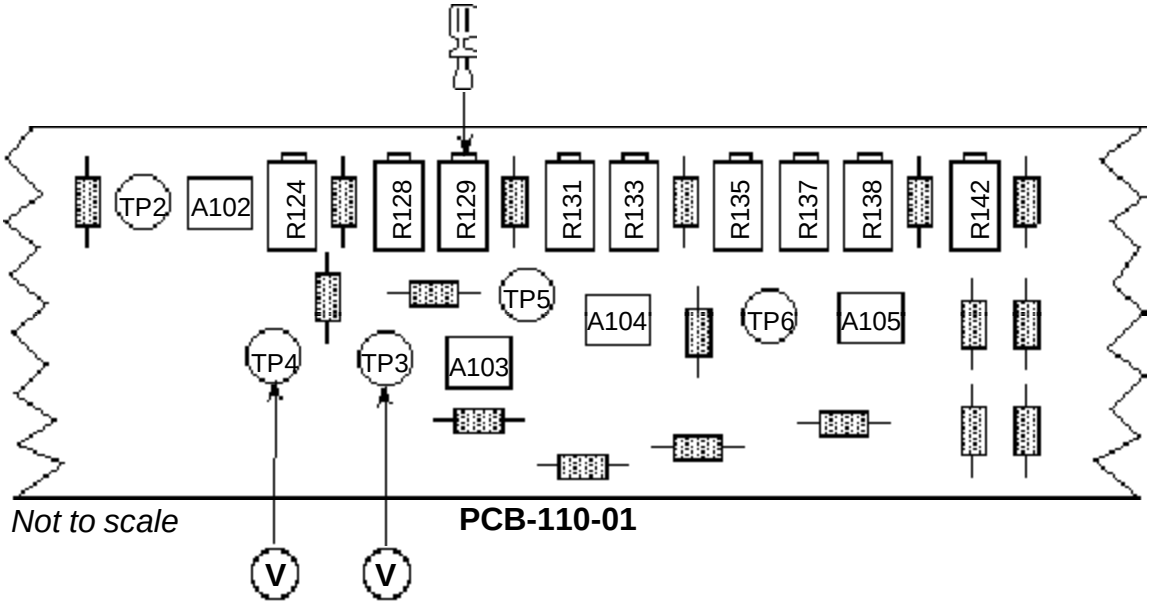

Not to scale

PCB-110-01

Dynamic Multiplier Calibration

Integrator Bias Calibration
Adjust R124 for -10mV DC at TP2.

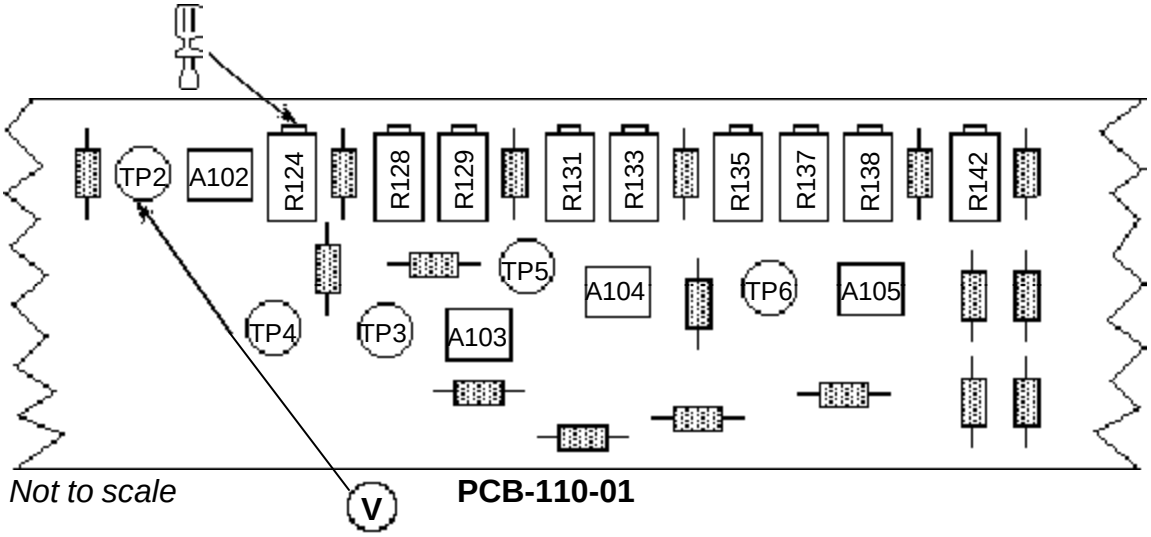

Not to scale **PCB-110-01**

P-Clip Adjustment
Adjust R109 fully clockwise (to Maximum).

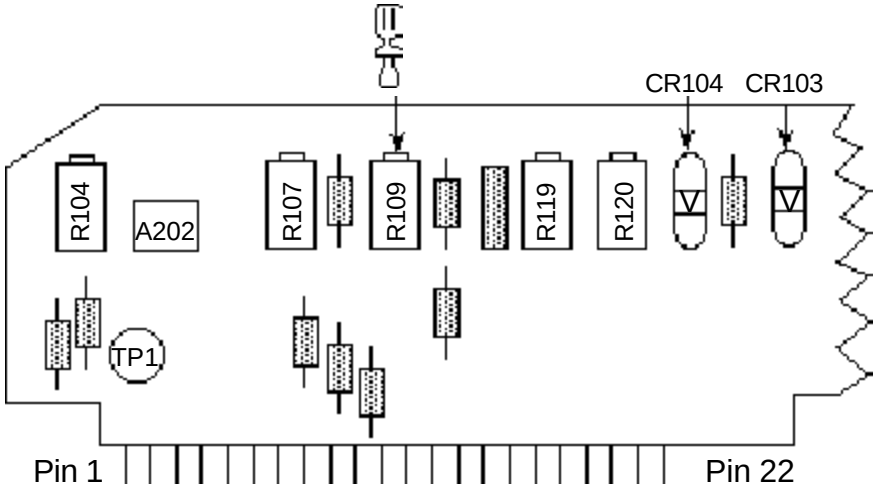

PCB-110-01
Not to scale

Initial Multiplier Offset Adjustment
Adjust R104 for 0mV DC +/-100mV at TP1.

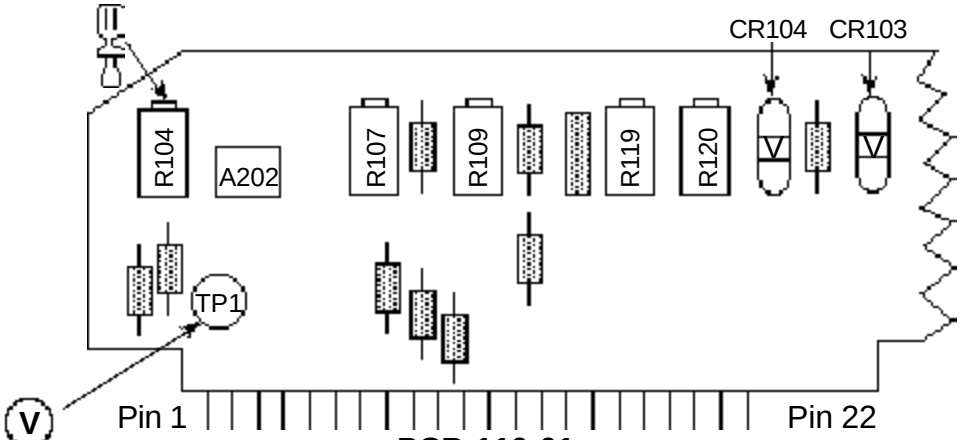

Not to scale

PCB-110-01

Multiplier X Input Null

- Apply a 1.0V rms, 120 Hz sine wave to the Cathode side of CR104.
- Adjust R119 for minimum 120 Hz signal at TP1.

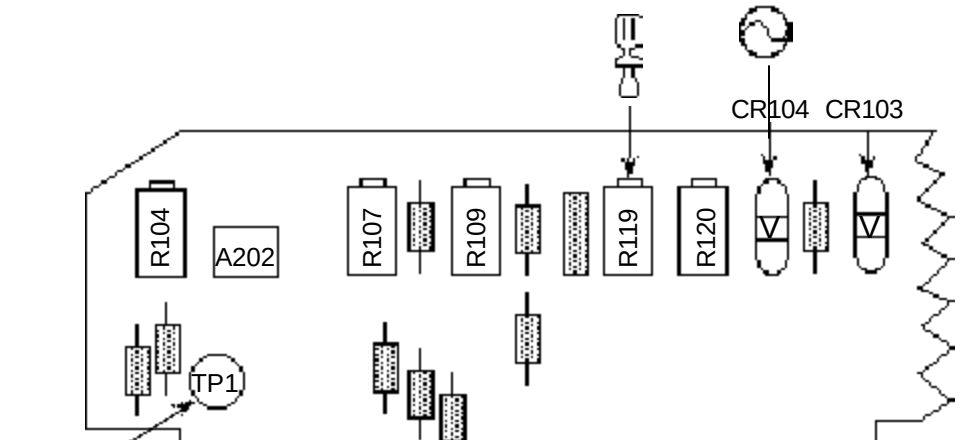

Not to scale

PCB-110-01

Multiplier Y Input Null

- Remove the signal from CR104.
- Apply a 1.0V rms, 120 Hz sine wave to the Program Input (J308).
- Adjust R120 for minimum 120 Hz signal at TP1.

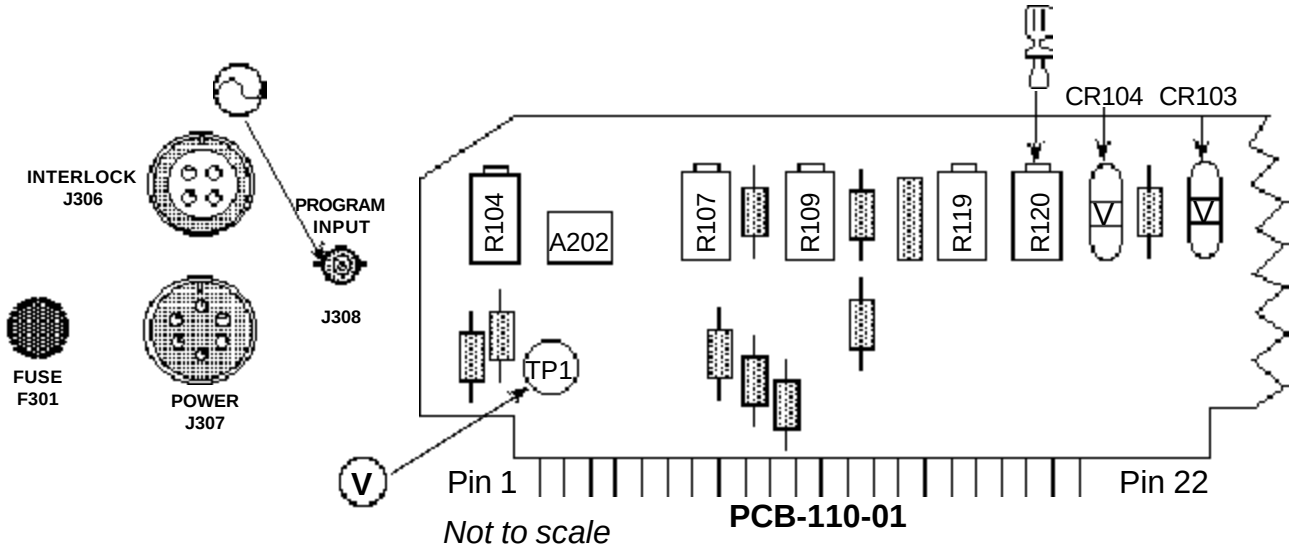

NOTE: Steps 2.4.7.4. and 2.4.7.5. may be slightly interactive. Repeat both adjustments until both inputs are nulled.

Final Multiplier Offset Adjustment

- Remove signal generator.
- Adjust R104 for 0mV +/-10mV at TP1.

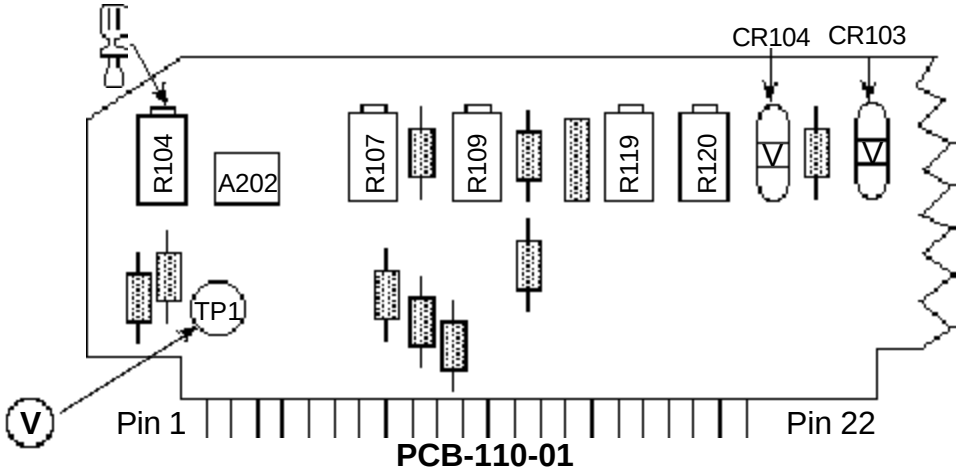

9.3. Exciter Head Calibration Procedure

Set front and rear panel switches and adjustments as follows:

Dither	(SW308)	Off
Load Cell Calibrate/ Operate	(SW307)	Operate
Frequency	(SW309)	Low
Power Amp Input	(SW312)	Internal
Static Preload	(SW310)	Compression
Static Controlled Variable	(SW311)	Internal
Dynamic Controlled Variable	(SW306)	Internal
Static Gain	(SW305)	Variable
Standby Level	(R313)	Full CCW
Static Set Point Level	(R301)	8.0
Dynamic Set Point Level	(R303)	5.0
Static Gain Level	(R307)	5.0

9.3.1. Load Cell Amplifier Calibration

Initial Setup

- Connect P305 end of the Controller Cable to J305 (Rear Panel).
- Connect the 4-pin cable to the load cell.
- Insert the Cal Plug into J304.

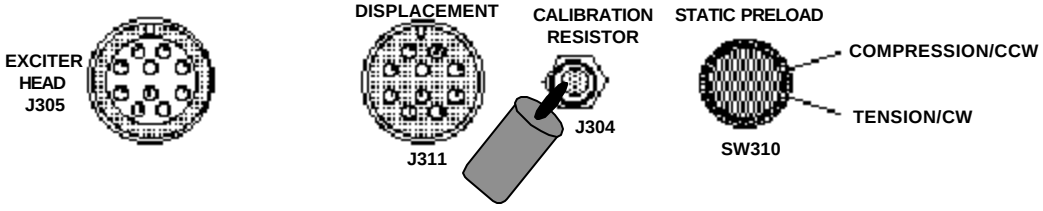

NOTE: The following two adjustments are very interactive; it will be necessary to repeat both adjustments until an acceptable balance is achieved.

Adjust Load Cell Zero Calibration

- Set the Load Cell Operate/ Calibrate Switch (SW307) to *OPERATE.*
- Adjust the Load Cell Zero (R302) for 0mV at TP8 or *LOAD CELL* outputs on Front or Rear Panel (J301 or J303).

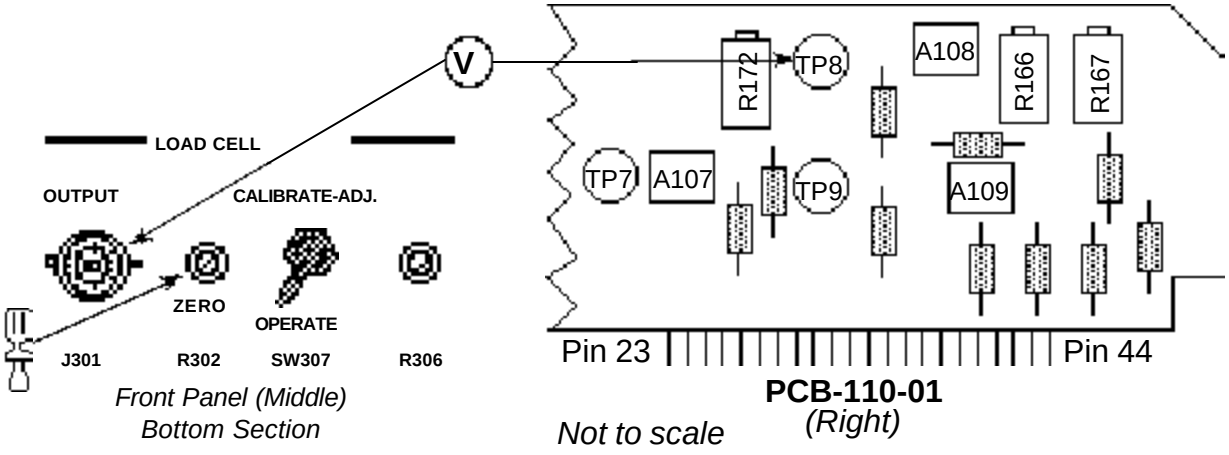

Load Cell Meter Calibration

- Set Load Cell Operate/ Calibrate Switch (SW307) to *CALIBRATE.*
- Adjust the Load Cell Calibration (R306) until the Static Meter reads the Force value (expressed in lbs or Kg) that is supplied on the Load Cell Cal Plug.

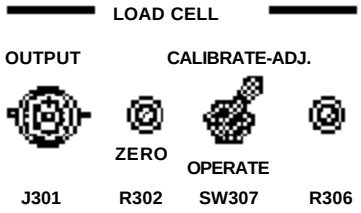

- Repeat Load Cell Zero and Load Cell Meter Calibration until calibration and zero balance is achieved.
- When finished leave the Load Cell Operate/ Calibrate Switch in the *OPERATE* position.

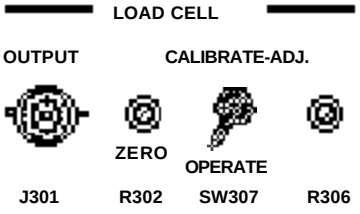

Load Cell Amplifier Scaling
Adjust R166 for Load Cell Calibration voltage at TP8 or *LOAD CELL OUT* using the following formula to determine values:

[Calibration Force (on Cal Plug)/Sens (on Cal Plug)]

Examples:
[357lbs per 300Ω/ 250lbs per Volt]
= 1.428 Volts per 300 KΩ

$$\frac{2558\ Kg}{1000\ Kg/V} = 2.558V$$

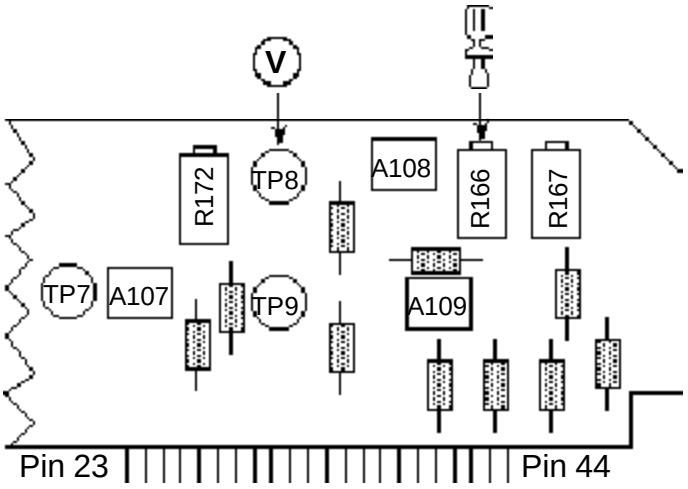

PCB-110-01

Not to scale

9.3.2. Static Loop Gain Calibration

Set the front and rear panel switches and adjustments as follows:

Excitation Mode Switch	(SW304)	Standby
Load Cell Calibrate/ Operate	(SW307)	Operate
Frequency	(SW309)	Low
Static Preload	(SW310)	Compression
Static Controlled Variable	(SW311)	Internal
Dynamic Controlled Variable	(SW306)	Internal
Static Gain	(SW305)	Variable
Static Set Point Level	(R301)	8.0
Dynamic Set Point Level	(R303)	5.0
Static Gain Level	(R307)	5.0

- Fixture the exciter head for compression into a rigid structure.
- Connect J305, J311, J309 (with BNC Pigtail to static variable input).
- Connect cables to the exciter head.
- Apply a 1.00V peak-peak, 5 Hz square wave to the Program Input (J308).

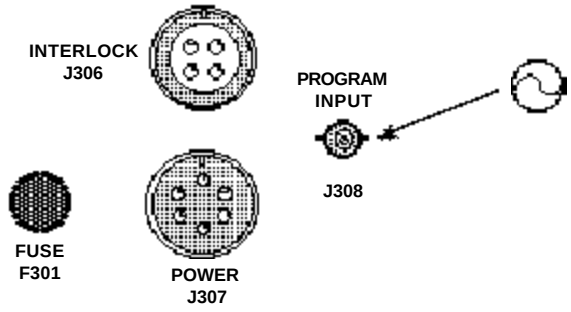

- Start the Hydraulic Supply.
- Set the Excitation Mode Switch (SW304) at *STATIC + DYNAMIC.*
- Adjust Dynamic Setpoint for 1 Volt Plateau to Plateau then adjust (R133) for 20% overshoot (1.2 volts Peak to Peak - as illustrated below). Measure at Load Cell output BNC on Front Panel.

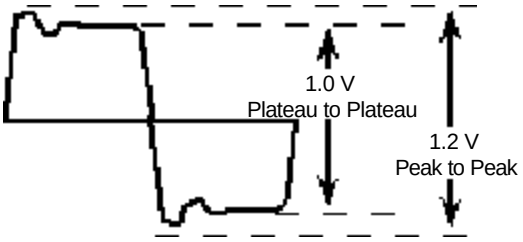

20% overshoot Square wave response for optimum Static Gain Setting.

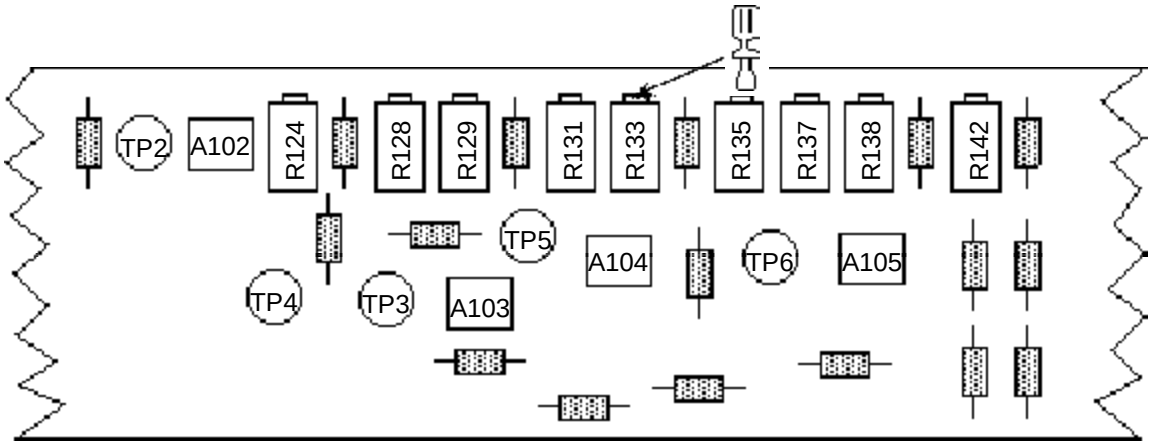

Not to scale **PCB-110-01**

9.3.3. Static Set Point Level Calibration

Set front and rear panel switches and adjustments as follows:

Excitation Mode Switch	(SW304)	Static
Static Gain	(SW305)	Fixed
Static Gain Level	(R307)	5.0
Static Set Point Level	(R301)	5.0

- Adjust R107 (Static Cal) for a 50% Static Meter Reading.

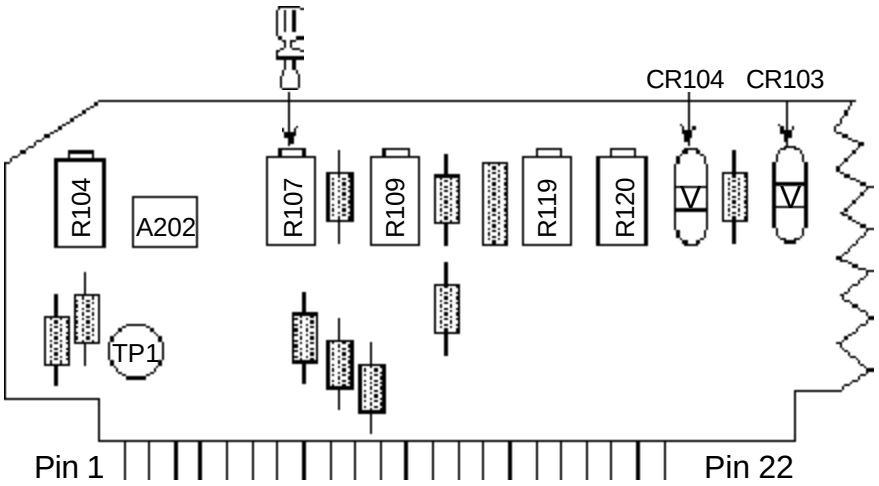

Not to scale

PCB-110-01

9.3.4. High Frequency Dynamic Level Calibration

Set front and rear panel switches and adjustments as follows:

Load Cell Calibrate/ Operate	(SW307)	Operate
Frequency	(SW309)	High
Static Gain	(SW305)	Fixed
Static Set Point Level	(R301)	8.0
Dynamic Set Point Level	(R303)	5.0

- Apply a 1.000V rms, 60 Hz sine wave to the Program Input (J308).
- Set the Excitation Mode Switch (SW304) to the *STATIC + DYNAMIC* position.
- Adjust R128 for a 50% Dynamic Meter reading (1.77V rms at 110-01-25).

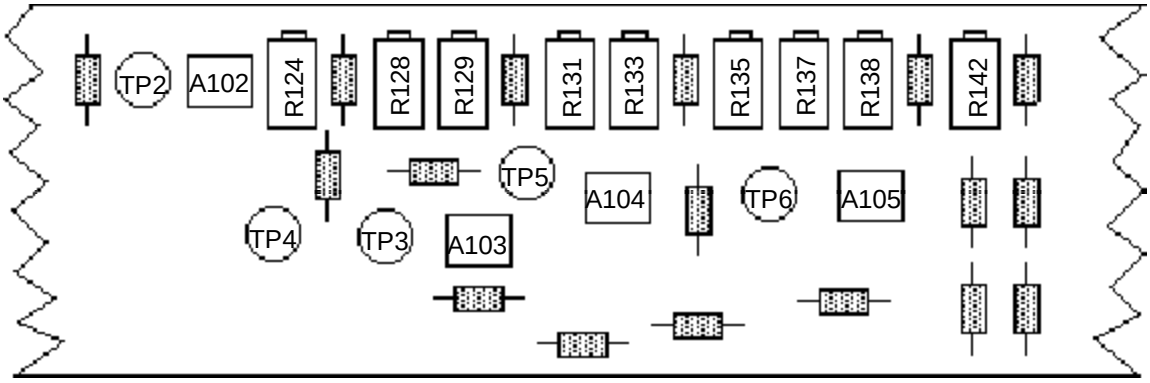

Not to scale **PCB-110-01**

9.3.5. Low Frequency Dynamic Calibration

Set front and rear panel switches and adjustments as follows:

Load Cell Calibrate/ Operate	(SW307)	Operate
Frequency	(SW309)	Low
Static Gain	(SW305)	Fixed
Static Set Point Level	(R301)	8.0
Dynamic Set Point Level	(R303)	5.0

- Apply a 1.000V rms, 10 Hz sine wave to the Program Input (J308).
- Set the Excitation Mode Switch (SW304) to the *STATIC + DYNAMIC* position.
- Adjust R137 for a 50% Dynamic Meter reading (1.77V rms at 110-01-25).

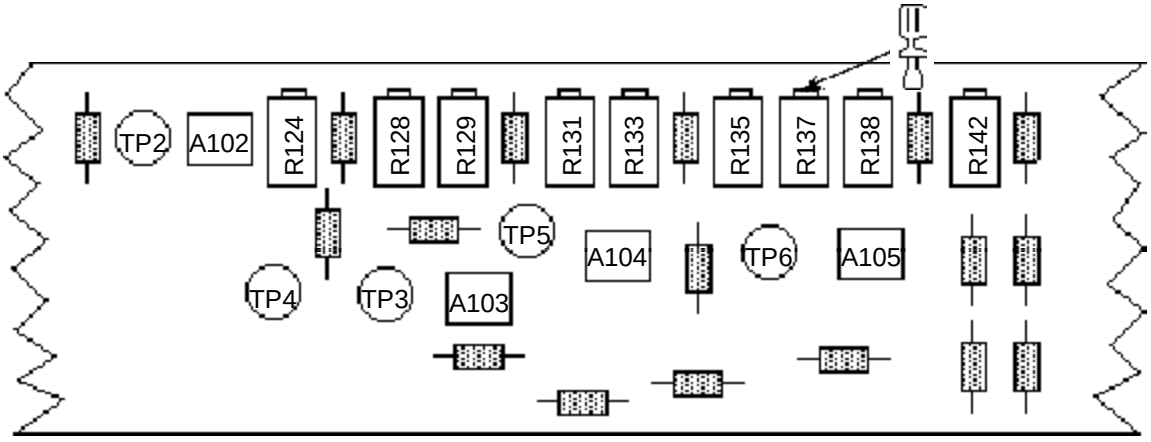

Not to scale **PCB-110-01**

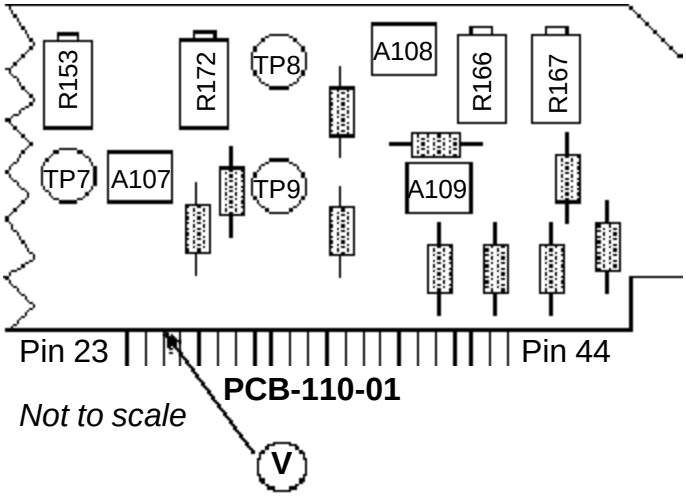

9.4. Displacement Calibration Procedure

Note: Fixture Exciter head for full Stroke.

9.4.1. LVDT Symmetry Verification and Adjustment

Set front and rear panel switches and adjustments as follows:

Excitation Mode	(SW304)	Standby/ Reset
Load Cell Calibrate/ Operate	(SW307)	Operate
Frequency	(SW309)	Low
Static Preload	(SW310)	Compression
Static Controlled Variable (Disconnect Displacement Feedback Signal for this set up)	(SW311)	External
Static Gain	(SW305)	Variable
Static Set Point Level	(R301)	10.0
Static Gain Level	(R307)	5.0

- Set the Static Preload Switch (SW310) to *TENSION* (CW). The head should fully extend.
- Set the Static Preload Switch to *COMPRESSION* (CCW). The head should fully retract.
- While monitoring 110-01-38 (WHT/ YEL wire) with a DC volt meter, you should observe a NEGATIVE voltage when the head is fully extended and a POSITIVE voltage when the head is retracted. These two voltages should be equal and opposite in magnitude.

> **NOTE:** The importance is in the equality of the numerical values not in their values. (i.e. +3 and -3 are just as good as +6 and -6)

- If the balance is off by more than 10%, the LVDT Rod or the postion of the LVDT on the Exciter Head should be adjusted.

WARNING

Do not make mechanical adjustments to an exciter head while the hydraulic power supply is active. Serious personal injury could result.

9.4.2. Displacement Zero Calibration

- Set the Static Setpoint (R301) to 10.0.
- Set the Excitation Mode switch (SW304) to *STATIC.*
- Set the Static Preload switch (SW310) to *TENSION*. The head should fully retract.
- Adjust R172 for 0mV at TP7.

9.4.3. Displacement Scaling Calibration

- Set the STATIC PRELOAD SWITCH (SW310) to *COMPRESSION*. The head should be fully extended.
- Adjust R153 for 10.000V at TP7.
- The static meter should read 100% full scale deflection.
- Repeat steps 4.2. and 4.3. until balance is achieved.

9.4.4. Final External Static Control Variable Calibration

- Verify 10.000V DC at TP7 (accurate to within 1.0mV)
- If necessary, adjust the Static Variable Cal (R311) for 0.5V DC at 110-01-28

9.4.5. Dynamic Displacement Calibration

Set front and rear panel switches and adjustments as follows:

Frequency	(SW309)	Low
Power Amp Input	(SW312)	Internal
Static Preload	(SW310)	Compression
Static Controlled Variable	(SW311)	External
Dynamic Controlled Variable	(SW306)	Internal
Static Gain	(SW305)	Variable
Static Set Point Level	(R301)	5.0
Dynamic Set Point Level	(R303)	5.0
Static Gain Level	(R307)	5.0

- Set the Excitation Mode Switch (SW304) to the *STATIC + DYNAMIC* position.
- Apply a 1V rms, 5 Hz sine wave to the Program Input (J308).
- Adjust R135 for a 5V peak-peak at TP7.

9.4.6. External Static and Dynamic Set Point Calibration

There are no adjustments or calibrations for the External Static and Dynamic Set Point inputs. Verify that the static controlled variable achieves full scale output with a +5VDC, +/-5% signal and that the dynamic controlled variable achieves full scale ouput with a -5VDC, +/-5% signal.